CIRCULAR LETTER

SECTION: **102.01 PREQUALIFICATION STATEMENTS AND COMPETENCY OF BIDDERS**
NUMBER: **102.01-01**
SUBJECT: **CONTRACTOR PERFORMANCE EVALUATION**
DATE: **MARCH 22, 2024**

As required in the prequalification rules, prime contractors are to be evaluated on all contracts using the Contractor Performance Evaluation Form. The Contractor Performance Evaluation shall be completed at the end of each calendar year and/or upon the completion of each contract. The evaluation period will cover from the beginning of each year or the beginning of the contract through the end of each year or the end of the contract. If the contract has more than one evaluation, then the final evaluation should be a representation of the previous evaluation(s) and the remaining evaluation period.

The Contractor Performance Evaluation Form shall be prepared following the guidance included in the form. The evaluation shall be rated by the Team Lead. The Team Lead should consult with Regional Safety Office for their feedback for rating the Safety Practices section. The evaluation shall be reviewed by the Region Transportation Engineer at District and approved by the District Manager or Director of Regional Operations. For contracts with consultant engineering and inspection (CEI), the consultant should rate and sign the evaluation after reviewing it with the TDOT Team Lead or Region Transportation Engineer at District. Evaluations of less than 70 shall also require review by the Director of Construction.

The contractor shall be provided a copy of the completed evaluation by the District Office. The contractor shall be given an opportunity to meet and discuss the evaluation regardless of the rating.

The Field Office personnel shall enter the contractor performance evaluation rating for each evaluation period into SiteManager under Contract Administration>Contractor Management>Contractor Evaluation. An electronic copy of the approved evaluation form shall also be attached in SiteManager for each rating in the Contractor Evaluation window. A scanned copy of the signed Contractor Performance Evaluation shall be emailed to Headquarters Construction Division, at **TDOT.ContPerfEvals@tn.gov**

A contractor's overall performance rating will be determined by the Headquarters Construction Division. It will be based on a weighted rating of any current prime contract(s) and any prime contract(s) completed within two years of the contractor submitting for prequalification. The overall weighted rating will be calculated using the original contract amounts and the related ratings for each respective contract.

Contractor Performance Evaluation Form

CIRCULAR LETTER

SECTION: **102.01 PREQUALIFICATION STATEMENTS AND COMPETENCY OF BIDDERS**
NUMBER: **102.01-02**
SUBJECT: **ATTESTATION FOR ILLEGAL IMMIGRANTS**
DATE: **MARCH 1, 2024**

Effective with the October 27, 2006 letting, all contracts will include Special Provision 102I. Special Provision 102I, "Employing and Contracting with Illegal Immigrants" requires the Contractor to attest, certify, and assure that they are not knowingly utilizing the services of illegal immigrants in the performance of each contract and shall not knowingly utilize the services of any subcontractor who will utilize the services of an illegal immigrant in the performance of each Contract. The Prime Contractor makes this initial attestation when they accept and sign the proposal contract.

The Prime Contractor must reaffirm this requirement semi-annually for each contract by completing the attached "attestation" form. To assure consistent and timely attestation, the Prime Contractor shall submit a completed attestation form for each awarded contract on January 1st and July 1st each calendar year in which work has not been completed.

The Field Office personnel shall maintain a file for each project with the completed Attestation forms for proper documentation. If a Prime Contractor fails to submit the required attestation form, the partial progress payment shall be withheld until the attestation is submitted by the contractor.

For projects with Consultant Engineering and Inspection services (including Erosion Prevention and Sediment Control Inspection), the project file shall include the completed Attestation forms for the CEI consultant. The consultant shall submit a completed attestation form for each project CEI contract agreement on January 1st and July 1st each calendar year in which work has not been completed. If a Consultant fails to submit the required attestation form, Monthly Progress Billings shall be withheld until the completed attestation form is submitted by the consultant.

ATTACHMENT 1

ATTESTATION REGARDING PERSONNEL USED IN CONTRACT/AGREEMENT PERFORMANCE

DUE JANUARY 1ST AND JULY 1ST BI-ANNUALLY	
SUBJECT CONTRACT/AGREEMENT NUMBER:	
ENGINEER/CONTRACTOR LEGAL ENTITY NAME:	
FEDERAL EMPLOYER IDENTIFICATION NUMBER: (or Social Security Number)	

The Engineer/Contractor, identified above, does hereby attest, certify, warrant, and assure that the Engineer/Contractor shall not knowingly utilize the services of an illegal immigrant in the performance of this Contract/Agreement and shall not knowingly utilize the services of any subcontractor who will utilize the services of an illegal immigrant in the performance of this Contract/Agreement.

SIGNATURE & DATE: _____

NOTICE: This attestation MUST be signed by an individual empowered to contractually bind the Engineer/ Contractor. If said individual is not the chief executive or president, this document shall attach evidence showing the individual's authority to contractually bind the Engineer/Contractor.

CIRCULAR LETTER

SECTION: **104.03 Contract Change Notification**
NUMBER: **104.03-01**
SUBJECT: **Contract Change**
DATE: **JULY 15, 2024**

Contract Change Notification

A. Standard Projects: Please refer to Standard/Supplemental Specification 104.03 for guidance on how to proceed with the contract change order notification process.

B. Alternative Delivery Projects:

1. For Design Build projects, all potential change orders shall be sent to Headquarters Alternative Delivery Division for approval and Headquarters Construction Division for review as soon as the potential change has been identified.

2. For all other Alternative Delivery projects, all potential change orders shall be sent to Headquarters Construction Division for approval as soon as the potential change has been identified.

Change Order Guidance for Notification Requirements

The following flow chart directs when and who to submit the change order documentation as well as notification requirements.

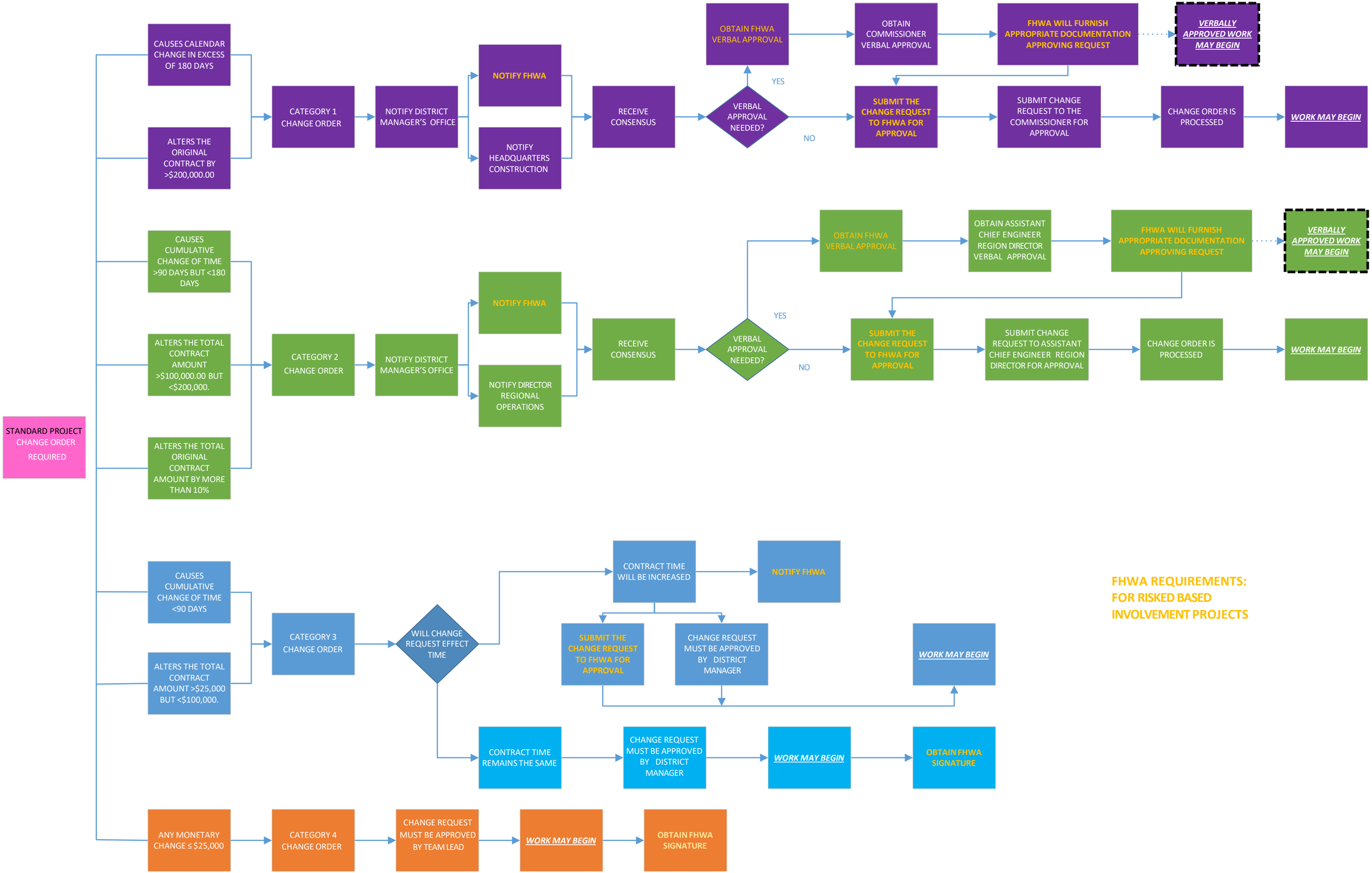

FHWA REQUIREMENTS: FOR RISKED BASED INVOLVEMENT PROJECTS

CIRCULAR LETTER

SECTION: **104.03 CONTRACT CHANGE NOTIFICATION**
NUMBER: **104.03-02**
SUBJECT: **CHANGE ORDER PROCEDURE**
Date: **July 15, 2024**

In accordance with Departmental Policy Number 355-01, Approval of Construction Change Orders and Force Account Work, all Standard Project and Alternative Delivery Project Change Orders shall be prepared electronically for execution including the appropriate justification and supporting documentation. When the Change Order is completely executed through the Adobe Sign process, the Resident Engineer or designee shall ensure the fully executed Change Order form, Change Order Signature page, and the supporting documentation is stored electronically in Contract File Management, CMS for future review and auditing purposes.

Change Orders (COs) shall be "Approved By" and "Recommended for Approval" as shown in the following tables for Standard Projects and Alternative Delivery Projects:

Standard Projects

	Category- 1	Category- 2	Category- 3	Category- 4
Commissioner	A			
Chief of Bureau Engineering		*		
Assistant Chief of Engineering	R	*		
TDOT Director of Construction	R	*		
TDOT Assistant Chief Engineer (Region Director)	R	A	*	
TDOT Director of Region Operations	**	R	*	*
TDOT Manager, District		R	A	*
TDOT Team Lead			R	A
Transportation Engineering Specialist			**	**

Alternative Delivery Projects

	Category- 1	Category- 2	Category- 3	Category - 4
Commissioner	A			
Assistant Chief Engineer of Program Delivery	R	A	*	*
TDOT Director of Alternative Delivery	R	R	*	*
TDOT Manager, Regional Alternative Delivery	R	R	A	A
TDOT Project Manager, Regional Alternative Delivery			R	R

A= Final Approval Change Order (the Federal Highway Administration (FHWA) must also approve COs with Risk-Based Involvement)
*= May approve for the Approving Authority
R= Recommend for first level Approval
**= May recommend approval for Recommending Authority

Change Order approval authority may not be delegated to a lower hierarchy level, only to a higher hierarchy level. However, recommendation for approval may be delegated to the next lower hierarchy level. For example, for a Category 3 Change Order, if a TDOT Manager, District position is vacant, the CO cannot be approved by the TDOT Team Lead but would rather have to be signed by the TDOT Director, Region Operations or higher.

The Resident Engineer will review all Change Orders for their District to ensure consistency and uniformity of the documents. The Resident Engineer or their designee will initiate the signature process in Adobe Sign per the information given below.

Recipients – Reviewers/Approvals – Adobe Sign

- The Contractor shall be set up as the first signature followed by the Surety.
- Subsequent Reviewers/Approvers from the District/Region/Headquarters shall be set up in accordance with the above referenced policy and listed in the order shown on the Tables below for Standard Projects and Alternative Delivery Projects:
- For Projects with Risk-Based Involvement, FHWA Area Engineer shall be the final signature.

CC Section – Adobe Sign

- Additional Regional Personnel, as needed

Note: Adobe Sign Only allows 11 CC Recipients. If more than 11 recipients need to be copied on the CO, the Resident Engineer will need to send a PDF copy of the signed change order after execution.

CC Recipients will receive a notification when the change order is initiated and again when fully executed.

For Resurfacing Projects, send a PDF copy of the signed change order to the following personnel:

- Statewide Pavement Program Manager: Sharon.Sanders@tn.gov

If the change order includes utilities, as noted in Memo 8/9/2021, send a PDF copy of the signed change order to the following personnel:

- Region Utilities Office: @tn.gov
- Program Operations Office: John.Kahle@tn.gov and Jeremy.Beeman@tn.gov
- Project Analyses Section: Anna.Meacham@tn.gov and Anna.Biggs@tn.gov

Attached Files

- Change Order Form
- Change Order Signature Page
- Supporting Documentation

The Resident Engineer shall ensure the fully executed Change Order Form, Change Order Signature Page and Supporting Documentation is stored electronically for future review and auditing purposes.
Paper Distribution is no longer needed.

Change Order Approval - Standard Projects - Adobe Sign

Standard Projects		Category 1	Category 2	Category 3	Category 4
Contractor **	Project Specific	Signature [1]	Signature [1]	Signature [1]	Signature [1]
Surety **	Project Specific	Signature [2]	Signature [2]	Signature [2]	Signature [2]
FHWA (Risk Based Involvement projects only)	Area Engineer	Signature [7]	Signature [6]	Signature [5]	Signature [4]
Headquarters					
Commissioner	TDOT.CO.Approval@tn.gov	Signature [6]			
Chief of Bureau of Engineering	Will.Reid@tn.gov	Copied			
Assistant Chief of Engineering	Lori.Lange@tn.gov	Signature [5]			
Director, Construction	Brian.Egan@tn.gov	Signature [4]	Copied	Copied	Copied
Manager, Contract Letting & Administration Support	Jason.Blankenship@tn.gov	Copied See draft approval note below	Copied See draft approval note below	Copied	Copied
Project Manager	Project specific	Copied See draft approval note below	Copied See draft approval note below	Copied	Copied
Finance	Ryan.Boling@tn.gov	Copied	Copied	Copied	Copied
Regional					
Assistant Chief Engineer Regional Director	Region Specific	Signature [3] See draft approval note below	Signature [5] See draft approval note below		
Director Regional Operations	Region Specific	See draft approval note below	Signature [4] See draft approval note below		
Local Materials & Test Field Services	Region Specific	Copied	Copied	Copied	Copied
District					
Manager, District	District Specific	Copied	Signature [3]	Signature [4] See draft approval note below	Copied See draft approval note below
Team Lead	District Specific			Signature [3]	Signature[3] See draft approval note below
Transportation Engineering Specialist	District Specific	Copied	Copied	Copied	Copied
	District Specific				
	District Specific				

** Authorized signers for Contractor & Surety may be found at: CMS > HQ Construction > ESignature. Master Compiled excel document

Signature Superscripts indicate the order the signatures should be assigned in Adobe Sign Draft approvals.

- Change Order 1 - Final Drafts will go to Regional Director & Senior Transportation Engineer- HQ Construction before entering in Adobe Sign
- Change Order 2 - Final Drafts will go to Regional Director & Senior Transportation Engineer- HQ Construction before entering in Adobe Sign.
- Change Orders 3 & 4 - District Manager will be the final approval before entering in Adobe Sign.

Change Order Approval - Alternative Delivery Projects - Adobe Sign

Alternative Delivery Projects		Category 1	Category 2	Category 3	Category 4
Contractor **	Project Specific	Signature [1]	Signature [1]	Signature [1]	Signature [1]
Surety **	Project Specific	Signature[2]	Signature [2]	Signature [2]	Signature [2]
FHWA (Risked Based Involvement Projects only)	Area Engineer	Signature [7]	Signature [6]	Signature [5]	Signature [5]
Headquarters					
Commissioner	TDOT.CO.Approval@tn.gov	Signature [6]			
Chief of Bureau of Engineering	Will.Reid@tn.gov	Copied			
Assistant Chief Engineer of Program Delivery	Joe.Deering@tn.gov	Signature [5]	Signature [5]		
Director, Construction	Brian.Egan@tn.gov	Copied	Copied	Copied	Copied
Director, Alternative Delivery	Clayton.Markham@tn.gov	Signature [3]	Signature [4]	Copied	Copied
Manager, Contract Letting & Administration Support	Jason.Blankenship@tn.gov	Copied	Copied	Copied	Copied
Finance	Ryan.Boling@tn.gov	Copied	Copied	Copied	Copied
Regional					
Project Management	Project Specific	Copied	Copied	Copied	Copied
Manager	Region Specific	Signature [3]	Signature [3]	Signature [4]	Signature [4]
Project Manager 3	Region Specific	Copied	Copied	Signature [3]	Signature [3]
Local Materials & Test Field Services	Region Specific	Copied	Copied	Copied	Copied
**Authorized signers for Contractor & Surety may be found at: CMS > HQ Construction > ESignature. Master Compiled excel document					
Signature Superscripts indicate the order the signatures should be assigned in Adobe Sign Draft Approvals.					

Change Order – Additional time due to overruns of major items (Non-CPM projects) (CL 108.07-01)

Responsible Person	Recipient
Team Lead/ District Change Order Designee	– "Determination of Time based on Quantity Increases" form • Complete form • Collect required signatures – Create SiteManager record and attach signed form – Email completed form: • Contract Payments Section Ryan.Boling@tn.gov

ADOBE Sign Detailed Examples On The Following Pages:

1. Select the appropriate Change Order Category Template from the "Start from Library" on the Adobe Sign Home Dashboard. (Note: These templates are "Shared by Blake Fulton".)

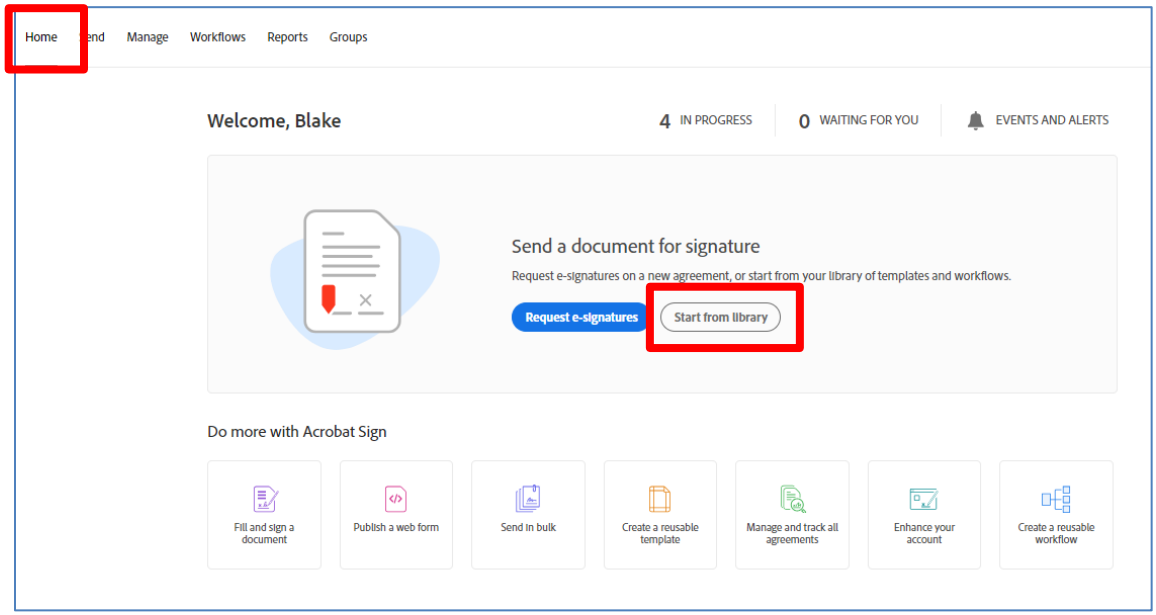

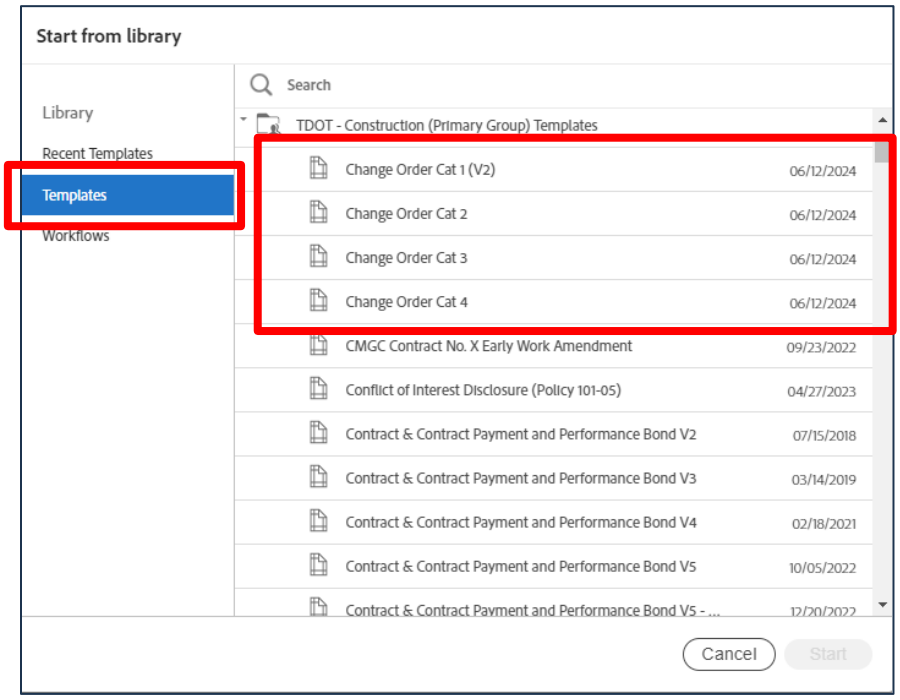

2. Enter the email addresses in the order shown below. (Do NOT change the order)

Change Order Category 1 Example

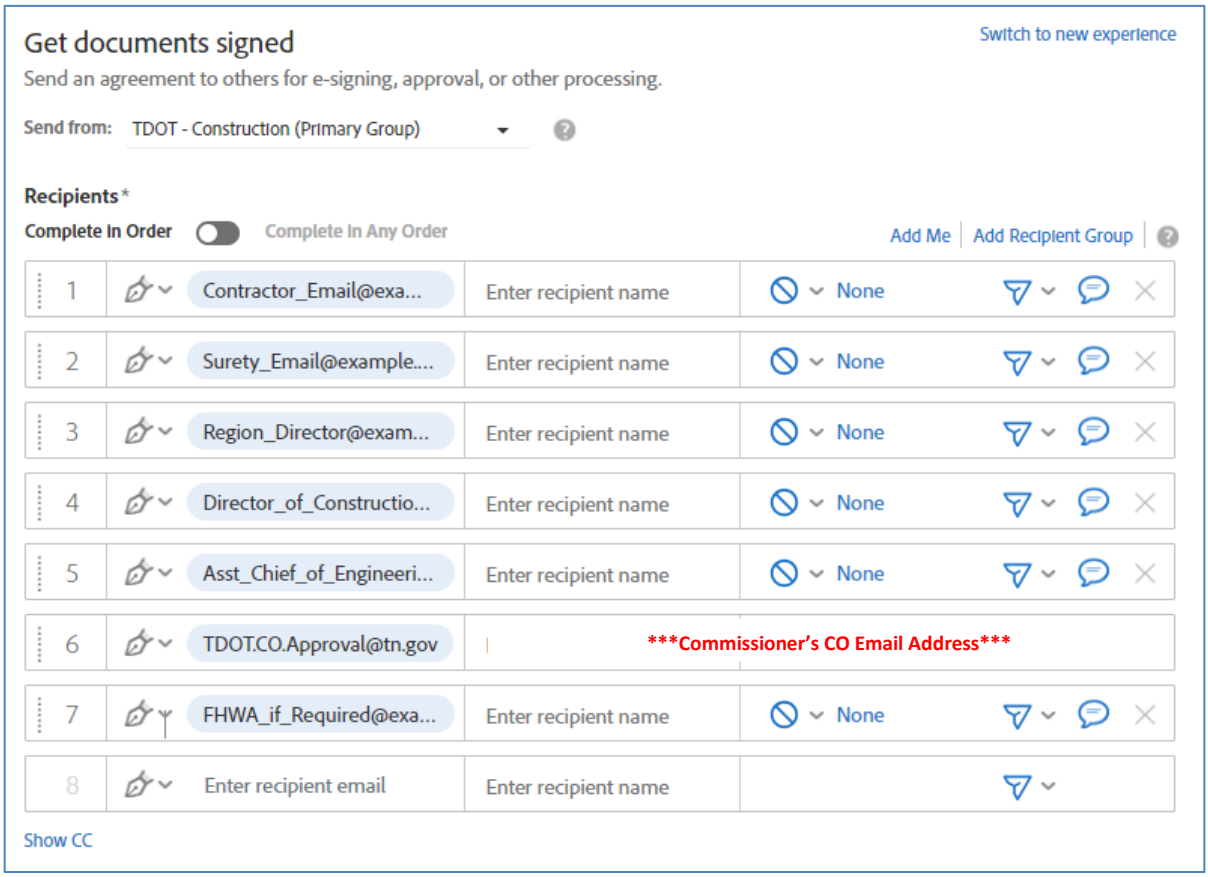

Change Order Category 2 Example

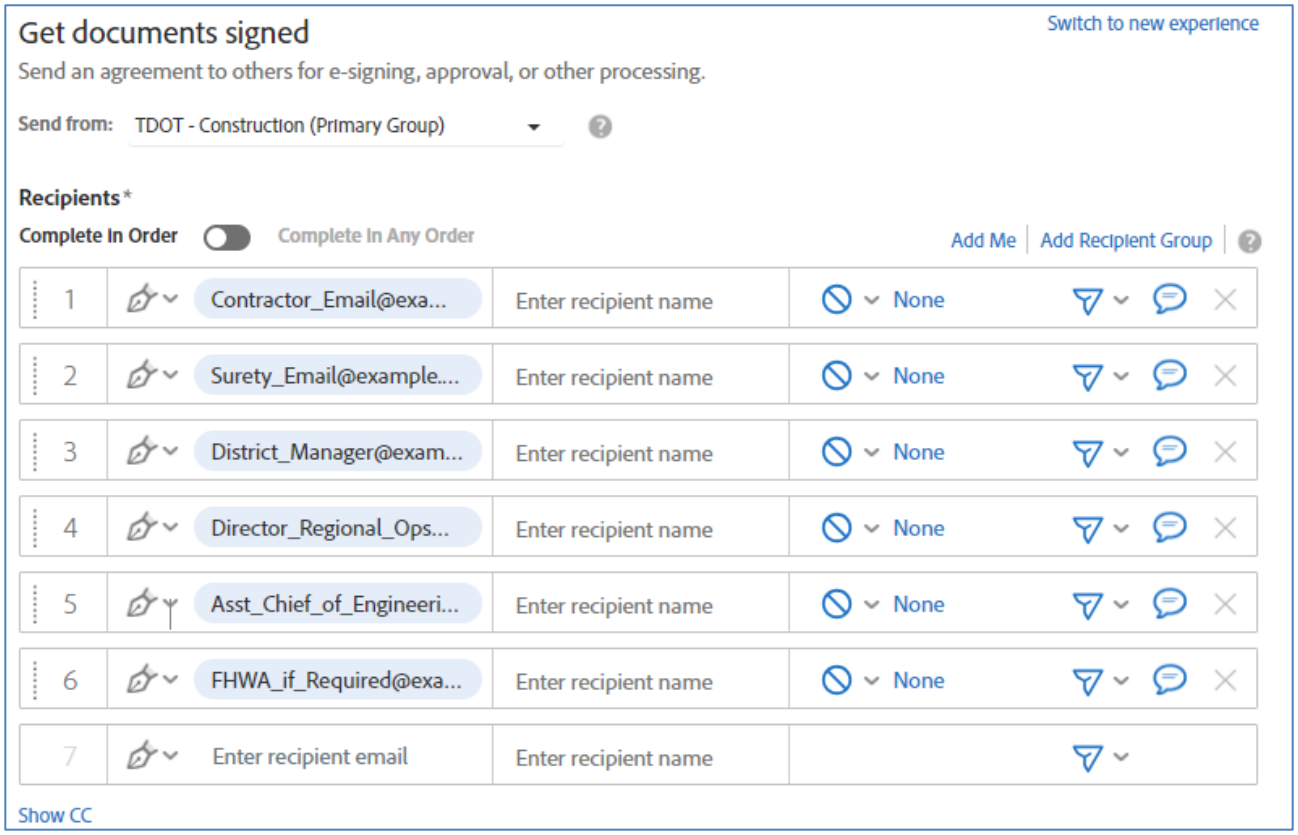

Change Order Category 3 Example

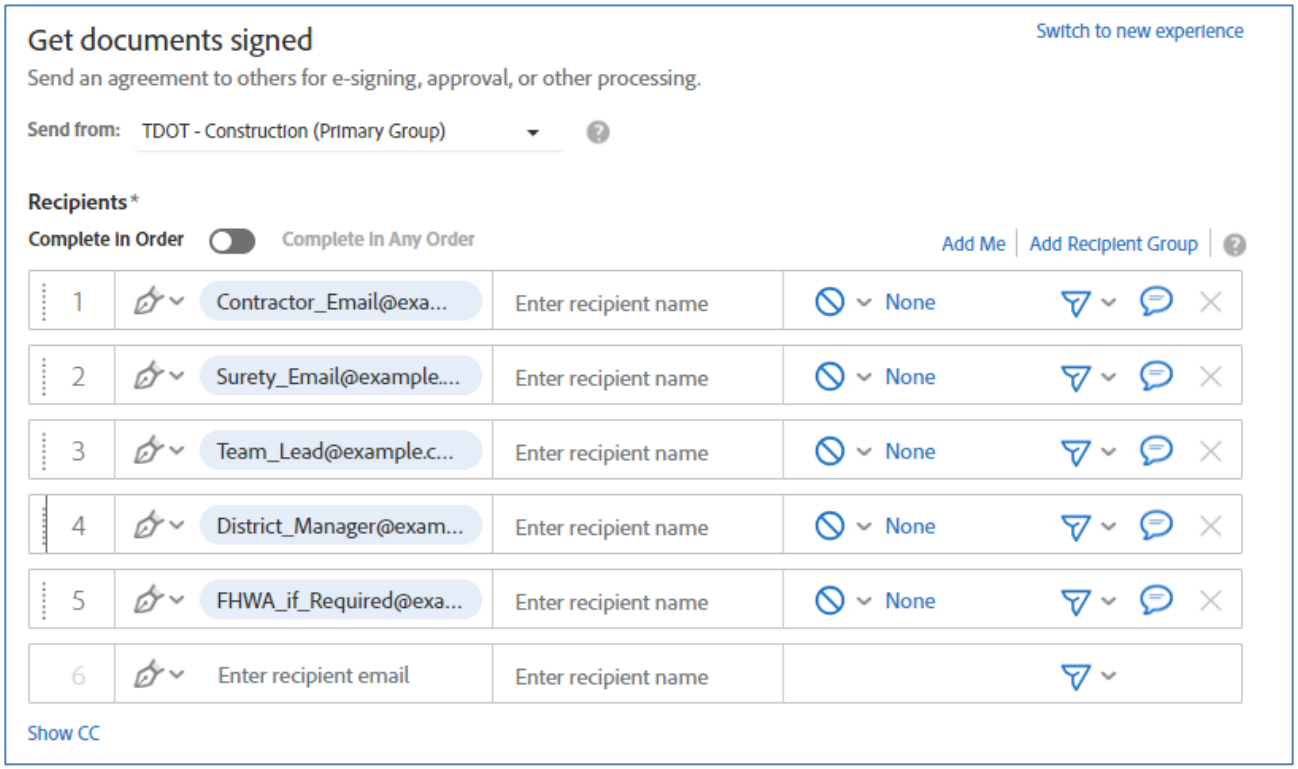

Change Order Category 4 Example

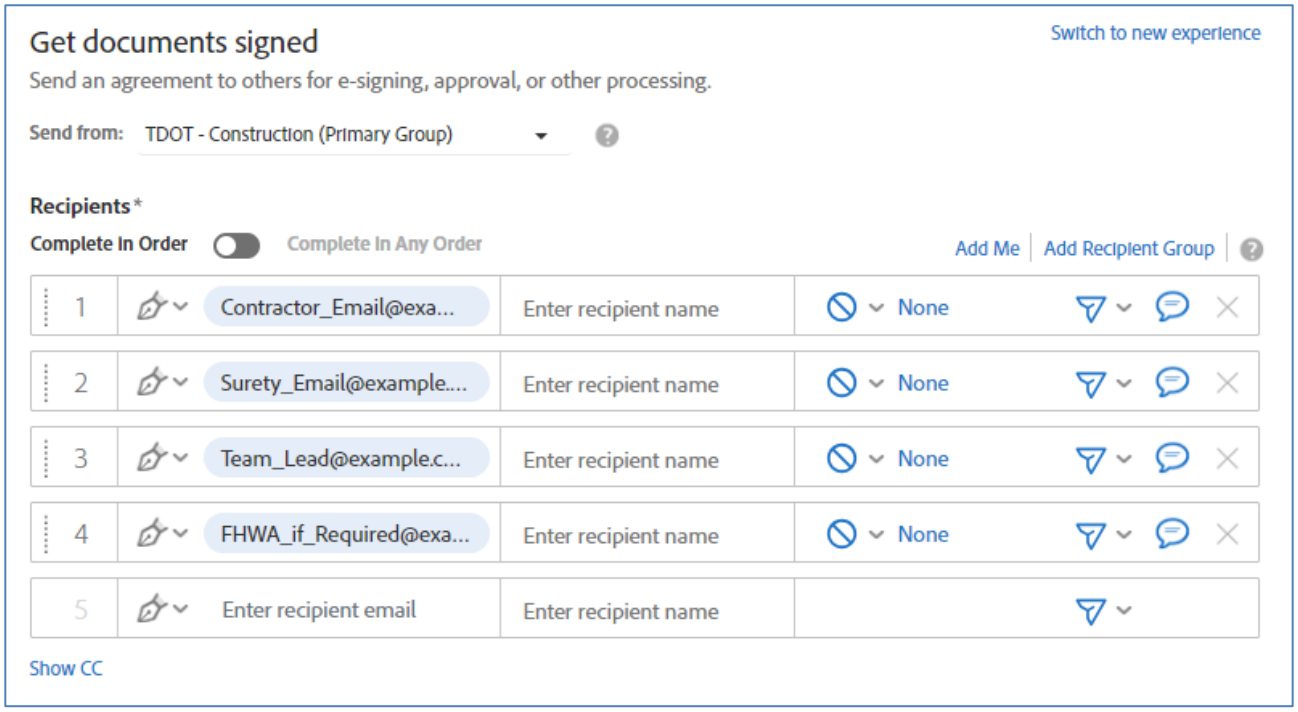

3. Add all cc's to the list. The cc list will receive confirmation when the process is started and finalized. ****Include all cc recipients as noted in the Circular Letter****

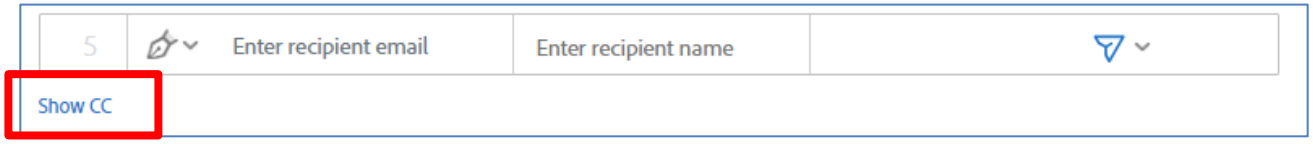

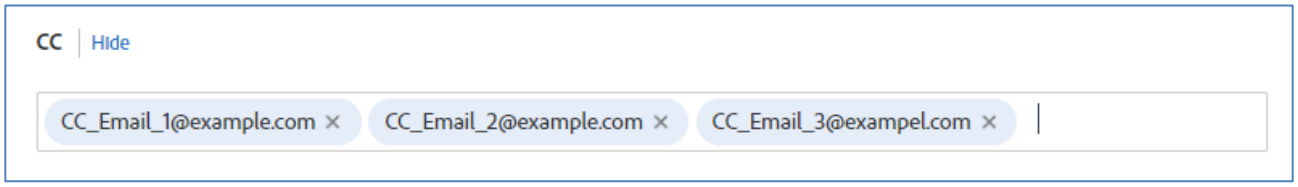

4. Enter in the Contract Number, Change Order Number and Category into the Message Box.

5. Upload all change order forms and supporting documentation. ****Pay attention to the order of the documents – they should be listed in the below order****

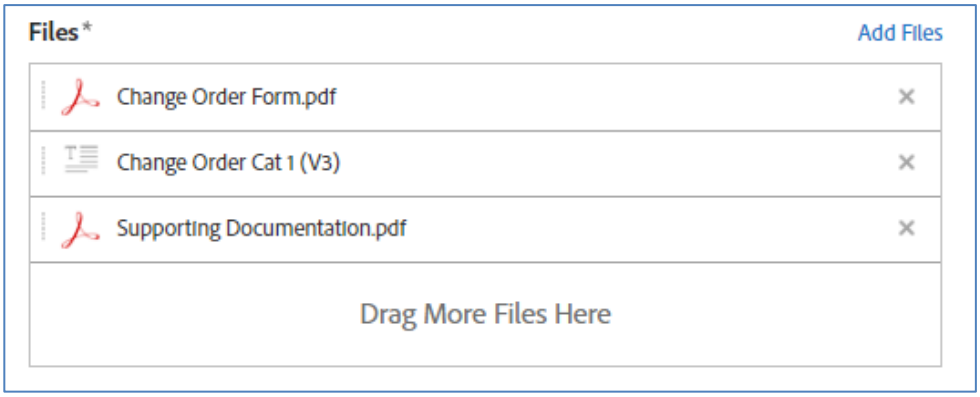

6. Review for accuracy and select Send.

7. Once the screen loads, all change order documents should appear in the order selected from step five (5). Scroll down to the signature page or press the blue Start Button.

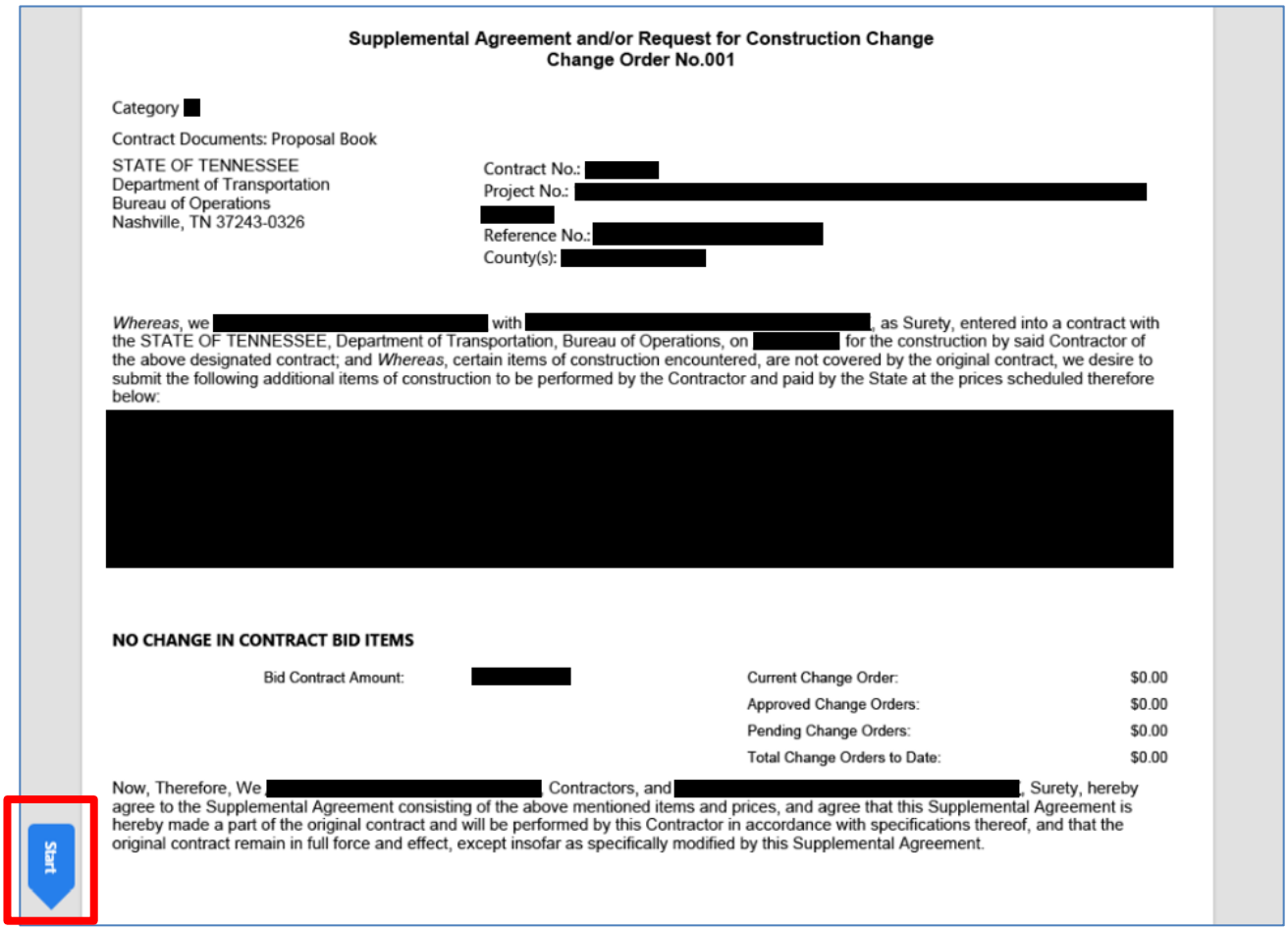

Supplemental Agreement and/or Request for Construction Change
Change Order No.001

Category [redacted]

Contract Documents: Proposal Book

STATE OF TENNESSEE
Department of Transportation
Bureau of Operations
Nashville, TN 37243-0326

Contract No.: [redacted]
Project No.: [redacted]
Reference No.: [redacted]
County(s): [redacted]

Whereas, we [redacted] with [redacted], as Surety, entered into a contract with the STATE OF TENNESSEE, Department of Transportation, Bureau of Operations, on [redacted] for the construction by said Contractor of the above designated contract; and *Whereas*, certain items of construction encountered, are not covered by the original contract, we desire to submit the following additional items of construction to be performed by the Contractor and paid by the State at the prices scheduled therefore below:

[redacted]

NO CHANGE IN CONTRACT BID ITEMS

Bid Contract Amount:	[redacted]	Current Change Order:	$0.00
		Approved Change Orders:	$0.00
		Pending Change Orders:	$0.00
		Total Change Orders to Date:	$0.00

Now, Therefore, We [redacted], Contractors, and [redacted], Surety, hereby agree to the Supplemental Agreement consisting of the above mentioned items and prices, and agree that this Supplemental Agreement is hereby made a part of the original contract and will be performed by this Contractor in accordance with specifications thereof, and that the original contract remain in full force and effect, except insofar as specifically modified by this Supplemental Agreement.

Start

8. Enter the Contract Number and Change Order Number in the designated fields.

SIGNATURE PAGE

Supplemental Agreement and/or Request for Construction Change

Next

Contract No.: _____*
Change Order No.: _____*
Category 1

9. Select *Click to Send* to send the document for signatures.

CIRCULAR LETTER

SECTION: **104.03 CONTRACT CHANGE NOTIFICATION**
NUMBER: **104.03-03**
SUBJECT: **USE OF PUBLIC INTEREST FINDINGS**
DATE: **OCTOBER 15, 2021**

Projects with Federal Funds

The Federal Highway Administration (FHWA), through the Stewardship and Oversight Agreement, has delegated TDOT authority to approve the use of public agency owned materials made available, the use of more cost effective or an emergency contract method, or the use of publicly owned equipment.

A. Procedures for Use of Materials Made Available by a Public Agency

The purpose of this document is to establish the procedures and requirements to utilize public agency owned materials on projects with federal funds.

Code of Federal Regulations (23 CFR 635.407) prohibits the use of public agency owned materials on projects using federal funds. Contracts for projects shall require the contractor to select the source from which materials are purchased. Exception to this requirement may be made when there is a definite finding by the State that it is in the public interest to require the Contractor to use material furnished by the State or from sources designated by the State.

The TDOT approval process must be completed in accordance with the following procedures.

A Public Interest Finding (PIF) must be submitted to Headquarters Construction for approval. The following information may be included in the PIF:

1. Describe how the use of the materials will benefit the public
2. Demonstrate the proposed use of the materials is more cost-effective than meeting the requirement
3. Show that Federal funds will not increase due to the use of the materials
4. Provide documentation showing any potential bidders are aware of the availability of the materials including the rates to be charged
5. Demonstrate the use of the materials does not provide a profit to the public agency
6. Demonstrate the use of the materials does not raise the cost of the proposed or current project.
7. Materials to be utilized shall be approved by the Materials and Tests Division
8. The material shall comply with all requirements and specifications
9. Any environmental requirements shall be outlined to provide justification, if applicable
10. The Federal Highway Administration directs that in most instances a disposal site for surplus material will be at the contractor's option. However, possible disposal sites may be identified within the plans or contract provisions.

If TDOT owns or has control over the source of a local material, the unit price at which such material will be made available to the contractor must be stated in the plans or special provisions. Federal participation will be limited to (1) the cost of the material to the TDOT or other public agency; or (2) the fair and reasonable value of the material, whichever is less. Special cases may arise that will

justify Federal participation on a basis other than that set forth above. Such cases should be fully documented and receive advance approval by Headquarters Construction.

Costs incurred by TDOT or other public agency for acquiring a designated source or the right to take materials from it will not be eligible for Federal participation if the source is not used by the contractor.

The contract provisions for one or a combination of Federal projects shall not specify a mandatory site for the disposal of surplus excavated materials unless there is a finding by TDOT that such placement is the most economical except that the designation of a mandatory site may be permitted based on environmental considerations, provided the environment would be substantially enhanced without excessive cost.

The designation of a mandatory material source may be permitted based on environmental considerations, provided the environment would be substantially enhanced without excessive cost. If at any time the use of a public agency owned site or material will increase the Federal cost of a project, FHWA will not participate in the funding for said project. FHWA will not participate even if the designation of the material would conserve other public funds.

Where mandatory borrow or waste sites will be permitted based on environmental considerations and which were discussed in the Environmental Impact Statements, such considerations may be used as the basis for subsequent PS&E public interest findings.

B. Use of More Cost Effective or an Emergency Contract Method

The purpose of this document is to establish the procedures and requirements to allow work to be added within a project based on more cost effective criteria or in the case of an emergency.

Code of Federal Regulations (23 CFR 635.204) dictates the contract method based on competitive bidding shall be used by TDOT for performance of work financed with Federal funds unless TDOT demonstrates another method is more cost effective or an emergency exists.

Emergency: An emergency is a situation that requires repair work, as provided for under the Federal Emergency Relief (ER) Program (23CFR688.105(i)), or when a major element of segment of the highway system has failed and the situation is such that competitive bidding is not possible or is impractical. Competitive bidding under such circumstances may not be possible or may be impractical because immediate action is necessary to minimize the extent of the damage, protect remaining facilities, or restore essential travel.

All projects shall utilize a competitive bidding contract method unless the proposed project will be more cost effective with the use of another contract method, or an emergency exists.

If a more cost effective contract method or an emergency requires an alternative contract method be utilized, a public interest finding (PIF) must be submitted to Headquarters Construction. The request shall include the following:

1. Clearly identify the cost savings or emergency justifying the use of another contract method (bid tabs, cost analysis, AUP, etc.)
2. Identify the kinds of work to be performed
3. Identify the method to be used
4. Explain the estimated costs and the estimated Federal Funds to be provided
5. Explain the reason or reasons the emergency exists or the reasons that force account for such project is considered cost effective

C. Procedures for Use of Publicly Owned Equipment

The purpose of this document is to establish the procedures and requirements to use publicly owned equipment on projects with federal funds.

Code of Federal Regulations (23 CFR 635.106) prohibits the use of publicly owned equipment on projects using federal funds. Publicly owned equipment should not normally compete with privately owned equipment on a project unless the use of publicly owned equipment is warranted and justified.

The TDOT approval process must be completed in accordance with the procedures and guidelines established

State projects shall not authorize the use of publicly owned equipment unless necessary and justifiable. When it is necessary, the following procedures must be adhered to:

1. The proposed use of publicly owned equipment is clearly set forth in the Plans, Specifications, and Estimates submitted to Headquarters Construction for approval
2. The advertised specifications specify the items of publicly owned equipment available for use by the successful bidder, the rates to be charged, and the points of availability or delivery of the equipment.
3. The advertised specifications include a notification that the successful bidder has the option either of renting part or all of such equipment from the State or local public agency or otherwise providing the equipment necessary for the performance of the contract work.

The State or local public agency shall not profit by renting equipment at the expense of Federal funds.

If unforeseeable conditions require the use of publicly own equipment, the Contractor and State agreed upon rental rate shall not serve as a basis for any increase in the cost of the project on which Federal funds are to participate.

When publicly owned equipment is used on projects constructed on a force account basis, costs may be determined by agreed unit prices or an actual cost basis. When agreed unit prices are applied to the equipment, rental rates or itemized rates will not be required in the estimate. If utilizing an actual cost method, submit the schedule of rates proposed, exclusive of profit for the publicly owned equipment to Headquarters Construction for approval.

If the use of publicly owned equipment is necessary and justifiable, a Public Interest Finding (PIF) must be submitted to Headquarters Construction for approval. The following information may be included in the PIF:

1. Describe how the use of publicly owned equipment will benefit the public
2. Demonstrate the proposed use of publicly owned equipment is more cost-effective than meeting the requirement
3. Provide documentation showing any potential bidders are aware of the availability of the publicly owned equipment including the rates to be charged
4. Demonstrate the use of publicly owned equipment does not provide a profit to the public agency
5. Demonstrate the use of the publicly owned equipment does not raise the cost of the proposed or current project.

CIRCULAR LETTER

SECTION: **104.04 MAINTENANCE OF TRAFFIC**
NUMBER: **104.04-01**
SUBJECT: **LANE/STRUCTURE WIDTH RESTRICTIONS**
DATE: **MARCH 1, 2024**

When routing trucks and/or oversize traffic around or detouring through a work zone, the Team Lead shall advise the District Manager, Regional Operations Office, and the Oversize & Overweight Permit Office approximately two weeks prior to the hard barrier restriction of lane width and/or closing of a structure on the State or Interstate Highway System. Soft barrier restrictions would not fall under the notice. This will allow the Regional Operations Office and the Oversize & Overweight Permit Office ample time to make advisements of the lane restrictions. Once the restriction or closure has terminated, the Team Lead shall again advise the Regional Operations Office and the Oversize & Overweight Permit Office.

The Field Office personnel will be responsible for completing and submitting the Structure-Lane Width Restriction Form and a location map to the Oversize & Overweight Permit Office at the email address shown on the form. A copy will also be submitted to the Regional Operations Office.

The lane width restriction shall also be entered into SWIFT. Once the restriction has ended, the Field Office personnel will be responsible for submitting the Structure-Lane Width Restriction Form again to notify of the restriction termination end date.

The Oversize & Overweight Permits Office may be reached at the following address:

Tennessee Department of Transportation
Suite 800 James K. Polk Building
505 Deaderick Street
Nashville, TN 37243-0331
Phone: (615) 741-3821

Send to:

Tdot.permitoffice@tn.gov

615-532-9289

☐ **STRUCTURE RESTRICTION**

☐ **LANE WIDTH RESTRICTION**

REGION/DISTRICT INFORMATION:	
Project Supervisor:	
Address of Office:	
Phone Number:	
PROJECT INFORMATION:	
Contract Number:	
Project Number:	
County:	
LANE CLOSURE:	
Date:	
Route:	
Log Mile:	
RESTRICTION INFORMATION:	
Date:	
Horizontal:	
Vertical:	
RESTRICTION TERMINATED:	
Date:	

Send to:

Tdot.permitoffice@tn.gov

615-532-9289

CIRCULAR LETTER

SECTION: **104.11 VALUE ENGINEERING CHANGE PROPOSAL**
NUMBER: **104.11-01**
SUBJECT: **VALUE ENGINEERING CHANGE PROPOSAL (VECP)**
DATE: **June 7, 2024**

The purpose of this Circular Letter is to establish requirements for the proper submittal and approval of Contractor **Value Engineering Change Proposals (VECP).**

Unless otherwise directed, a Contractor may submit a VECP on any project as long as the total estimated savings is greater than $25,000. VECP's that propose a total savings of less than $25,000 (twenty-five thousand dollars) will normally not be considered unless there are other non-monetary savings or benefits to be realized.

All VECP's must be reviewed by the appropriate TDOT Divisions to assure all original design, structural, environmental, geotechnical, safety, etc. intentions are not compromised. The VECP form shall be completed with each VECP submittal to verify acceptability with the appropriate Divisions. See "EXAMPLE" of form on page 2.

It will be the responsibility of the Headquarters Construction Division to assure all Category 1 Change Orders for VECP are acceptable by the applicable divisions (and FHWA when applicable), Category 2 Change Orders shall be submitted to District Office, and Team Leads to assure the appropriate Divisions (and FHWA when applicable) accept the VECP for Category 3 Change Orders.

Before any VECP "Concept" or VECP is to be considered, the Contractor must provide all the minimal information required in the specifications.

Contract bid unit prices shall be carefully reviewed. Any prices exceeding average prices by more than 10% should have sufficient data and calculations supporting the increased prices.

The Contractor and TDOT will split the actual net savings. The actual savings will be determined when all the work outlined in the VECP and Change Order is completed, and final quantities are known. The quantities of other items not in the Change Order that change as a result of the VECP shall be considered in the actual savings calculation. The contractor shall be paid 50% of the actual savings only when all the VECP work is completed.

In accordance with standard specification 104.11, any VECP's that result in an increase greater than the original contract amount will be paid at a rate of 50% of the contract prices for all costs above the original contract amount.

VECP form

EXAMPLE

Contract No.: CNE 520	**Project No.:** 40172-4585-04
Date Submitted: July 4, 2006	**County:** Washington
Contractor: Uncle Sam Grading Co.	**Estimated Savings:** $ 67,000
Project Description: The grading and paving of U.S. 76 from East of Atlantic Ave. to Pacific Coast Rd.	
VECP Description: Revise the drainage plans to replace the 6'x4' box culvert at STA 17+76 and STA 20+06 with a 72" RCP-Class III pipe, and the 45"X73" arch pipe with a 60" RCP pipe at STA 25+50	

Review needed	Division	Acceptable	Reviewed By:	Date:
YES	**Region Preconstruction**	**YES NO**	Alfred E. Newman	July 12, 2006

Comments: VECP is satisfactory as submitted

Review needed	Division	Acceptable	Reviewed By:	Date:
YES	**Structures/ Hydraulics**	**YES NO**	Howdy D. Doody	July 13, 2006

Comments: New pipe sizes are satisfactory as proposed with equivalent capacity

Review needed	Division	Acceptable	Reviewed By:	Date:
YES	**Environmental Division Director**	**YES NO**	Sierra P. Nevada	July 13, 2006

Comments: Will revise permit with TDEC to show new pipe sizes

Review needed	Division	Acceptable	Reviewed By:	Date:
NO	**Geotechnical Operations**	**YES NO**		

Comments:

Review needed	Division	Acceptable	Reviewed By:	Date:
NO	**FHWA**	**YES NO**		

Comments:

Review needed	Division	Acceptable	Reviewed By:	Date:
NO	**Maintenance/ Traffic**	**YES NO**		

Comments:

CIRCULAR LETTER

SECTION: **105.02 AS-BUILT PLANS**
NUMBER: **105.02-01**
SUBJECT: **AS-BUILT PLANS**
DATE: **MARCH 15, 2024**

All significant changes not included in a change order or plans revision shall be documented by the Team Lead and submitted to the appropriate stakeholders as well as the project file. A significant change would include, but not necessarily be limited to, pavement section thickness and/or width, utility relocations, drainage size and/or routing, rights-of-way, ITS, and structure modifications. If there is a question of the significance of the change, a final determination shall be determined by the District Manager.

The Team Lead will submit with the final records documentation advising if there were no significant deviations.

CIRCULAR LETTER

SECTION: 105.06
NUMBER: 105.06-01
SUBJECT: REQUIRED NOTIFICATIONS
DATE: MAY 17, 2024

NOTIFICATION TO CONTRACTOR:

Notification of the Pre-construction Conference to the Contractor should contain:

1. An emphasis that project level supervisors need to be in attendance. The Contractor's EPSC representative should attend as well.
2. The Contractor is to notify all subcontractors of the date, time, and place soliciting the attendance.

NOTIFICATION TO LOCAL OFFICIALS:

Local Officials are to be notified in writing of the proposed schedule of construction before work is started on any facilities that may fall within their jurisdiction. If desired by said officials, a meeting could be scheduled to fully apprise them of the impact of the proposed construction.

The Tennessee Highway Patrol and/or local law enforcement shall be invited to the Pre-construction Conference on all projects on the interstate system.

On projects where multiple parties are involved (i.e., Railroads, utility companies, other DOT personnel, etc.), all parties should be notified at least one week prior to the Pre-construction Conference.

The Department will document the notification requesting Railroad attendance in the project file.

NOTIFICATION TO CONTRACTOR CONCERNING ARCHAELOGICAL CERTIFICATION OF WASTE AND BORROW SITES:

The Contractor shall be notified at the Pre-construction Conference to obtain an archaeological certification for any exclusive waste and/or borrow site located outside the project rights-of-way, in accordance with 107.06 of the Specification and the Waste and Borrow Manual. The certification shall be obtained and a copy forwarded to the Team Lead prior to the movement of any material from or to the site.

The Contractor shall make the request for certification at the following address:
Section.106@tn.gov

And shall include the following information:

1. The County where the project is located.
2. Project and Contract Number, including the description of the project.
3. Name and address of the Contractor

Jennifer Barnett
Tennessee Division of Archaeology
1216 Foster Ave.
Cole Building 3
Nashville, TN 37243

PRECONSTRUCTION NOTICES AND STARTING NOTICES SHALL BE SENT TO:

Director of Construction
TDOT.HQConstNotices@tn.gov

District Manager

Regional Field Services (Mat. & Tests)
Regional Environmental Manager
Regional Preconstruction Roadway Design Office
Regional Safety Office

Compliance and Field Services Program
TDOT.Env.FieldServices@tn.gov

Materials & Tests Division
TDOT.MaterialsTests@tn.gov

Small Business Development Program Office
TDOT.DBE.Program@tn.gov

Program Operations Office
John.Kahle@tn.gov

Labor Standards Unit/Prevailing
Wage Commission
Rachel.Tate@tn.gov

Bureau of Workers' Compensation
Elizabeth.Cornicelli@tn.gov

Contract Payments Section
Ryan.Boling@tn.gov

CIRCULAR LETTER

SECTION: **105.07 COOPERATION WITH UTILITIES (RAILROADS)**
NUMBER: **105.07-01**
SUBJECT: **UTILITY RELOCATION PROCEDURES**
DATE: **MAY 15, 2024**

1. Utility relocations and adjustments are to be made in accordance with FHWA's FHPM 6-6-3-1 dated September 6, 1985.

2. Advise all utilities in writing at the preconstruction conference that work performed without prior notification to allow Department verification will not be reimbursed. Due to the fact that State Project Work within a railroad's rights-of-way must receive approval of the railroad being impacted by such project, and the fact that a railroad's rights-of-way is private property and must be treated as such, that in cases where work to accommodate such project has been performed by a railroad on a State Highway Project and/or State Managed Utility Relocation Project, and such work is performed for some reason without prior notification to the Department, the work performed shall be inspected and verified by the Construction Field Office and/or the Department's Railroad Inspection Office prior to any reimbursement to a railroad for such work. This letter should also include instructions as to how, where and when the Team Lead or representative may be reached.

3. Team Lead should emphasize the need for proper traffic control by the utility companies during construction. Closer monitoring by Field Office personnel of the utility companies is needed.

4. Team Lead should notify the Regional Utilities Office if assistance is needed in setting up proper records.

5. Team Lead should advise the utility companies in writing as to the need for inspection of all salvaged materials. These inspections will now be performed by the Field Office personnel.

6. When personnel changes are made Team Leads must ensure that new utility inspectors are aware of their job responsibilities and have all pertinent materials.

7. All utility/railroad activities are to be recorded daily on Form DT-0667 regardless of whether said relocations are reimbursable or not.

8. Plans should be reviewed and possible utility conflicts with proposed construction investigated. (Ex. Underground utilities and guardrail)

9. The District Office is to develop a system of periodic random review of each Team Leads utility relocation procedure to ensure compliance.

CIRCULAR LETTER

SECTION: **105.07 COOPERATION WITH UTILITIES**
NUMBER: **105.07-02**
SUBJECT: **CONSTRUCTION CONTRACTS AND CHANGE ORDERS INVOLVING UTILITIES**
DATE: **MAY 15, 2024**

Reference: Memorandum Dated August 9, 2021

After the award of a construction contract containing "Move In" utilities, the Program Development and Administration Division (Program Operations Office) will review the bid prices and costs of the various utilities and modify the funding based on the awarded bid. Upon completion of this review and funding modification, the Finance Division (Project Analysis) will notify the Utilities Division if the utility cost is more than the current utility deposit.

If additional funds are owed or the policy cap of $2.5 Million (TDOT Policy 340-07*) is exceeded, then an additional deposit will be required for the amount owed.

During construction of a project that includes "Move In" utilities, all Category 1 and Category 2 Construction Change Orders (CO's) that involve adding, revising, or deleting utilities must be analyzed and documented as stated below by the Regional Utilities Office with assistance from the Construction District/Field Office. This documentation is necessary to confirm all utility expenses are eligible for TDOT payment and the maximum amount specified in the TDOT Policy has not been exceeded. If it is determined that the utility owner owes money to TDOT, the Regional Utilities Office will notify the Headquarters Utilities Division so they can inform the utility owner of the money owed. TDOT should request written confirmation/acknowledgement of the money owed from an Authorized Representative of the utility owner. If the additional amount owed from the Utility owner is greater than $200,000, then a deposit will be required for the additional amount. The Project Analysis Section will invoice the Utility owner for the deposit/money owed. The change order is to be executed regardless of, and independent of, the receipt of any needed deposits.

The following documentation is to be provided by the Regional Utilities office with assistance from the Construction District/Field Office and shall be included with the supporting documentation with the Change Order:

1) What is eligible for reimbursement from the original "Utility Relocation Contract"**;
2) The original "estimated" utility amount shown in the "Utility Relocation Contract" including the percentages of "pro-rata share" and the actual contract amount (i.e., Awarded total) for all items for the specific utility;
3) Statement that the items in the change order do, or do not, include betterment;
4) The remaining amount eligible for reimbursement based on the actual contract amount, and amount of Change Order to show the "balance" of eligible expenses or estimated amount owed;
5) A revised Modified Utility Estimate System (MUES) Spreadsheet; and
6) Documentation that the utility owner has been notified of the additional costs that will be owed to TDOT, and confirmation if received.

A copy of each executed Change Order (Category 1, 2, 3, and 4) and supporting documentation shall be sent to the Program Operations Office and the Project Analysis Section by the Field Office for their records and to properly invoice the utility owner.

As the construction project progresses, the Project Analysis Section will issue invoices (bills) to the utility owner quarterly once the deposit amount has been exceeded and the utility owner owes the Department monies for the utility relocations. Upon completion of the project, the Project Analysis Section will issue a final invoice for amounts owed the Department or reimburse the utility owner for any overpayments made.

Example 1:

1) All water distribution pay items are eligible and 100% were on state rights of way.
2) Original estimate for the twenty-five (25) 795-xx.yy pay items was $1,206,855. Actual awarded amount for the 25 pay items was $1,479,685.
3) Change Order items x, y and z are for betterment***, all other items are revised quantities or added items. Total change order amount is $325,987.
4) The value of work allowed per TDOT policy is $2,500,000, and therefore the amount remaining for Chapter 86 eligibility is $1,020,315 ($2,500,000 - $1,479,685). Change Order items x, y, and z are Betterment items and the costs for the betterment portion is the responsibility of the utility. Betterment costs are $125,000. Therefore, the utility company will owe TDOT $125,000 and the remaining $200,987 ($325,987 - $125,000) is eligible for 100% state reimbursement.

Example 2:

1) All electrical distribution pay items are eligible for reimbursement. It was estimated that 75% of utilities were on state rights of way and 25% were on private easement****.
2) Original estimate for the thirty-seven (37) 790-xx.yy pay items was $3,400,206. Actual awarded amount for the 37 pay items was $3,429,685.
3) Change Order items are needed due to a plans revision that revised quantities and added items. The change order amount is $333,131, split 75/25%, or $249,848/$83,283.
4) Based on the original estimate in the Utility Relocation Contract, TDOT would be responsible for $850,051.5 ($3,400,206 x 0.25). The remainder $2,550,154.5 ($3,400,206 - $850,051.5) is eligible for Chapter 86 reimbursement. However, since the TDOT policy is $2,500,000 maximum, the utility made a deposit of $50,154.5 for the difference ($2,550,154.5 - $2,500,000).
5) Based on the actual awarded amount of the utility items, the amount TDOT would be responsible for $857,421.25 ($3,429,685 x 0.25). The remainder $2,572,263.75 ($3,429,685 - $857,421.25) would be eligible for Chapter 86 reimbursement, however, since the TDOT policy is $2,500,000 maximum, the utility would owe TDOT the difference $72,263.75 ($2,572,263.75 - $2,500,000). Since a deposit of $50,154.5 was already made, the Utility still owes TDOT $22,109.25, the difference of $72,263.75 and $50,154.5.
6) Therefore, since the maximum amount of reimbursable costs has been exceeded, the utility owes TDOT the amount of the Change order not represented by private easement (75%), $249,848, and the deposit difference of $22,109.25, for a total amount owed of $271,957.25.

* TDOT Policy Number 340-07, Utility Relocations from Public Highway Rights-of-Way Under TCA 54-5-804, identifies "Qualified" and "Non-qualified" projects and the limitations for reimbursement. Reimbursement for relocations on public rights of way is capped at $2.5 Million for each category of utility facilities.

** From the Standard "TDOT UTILITY RELOCATION CONTRACT" (page 1)

> WHEREAS, the Utility has furnished TDOT with an estimate, plans, and specifications showing the cost and manner of relocating these facilities, which estimate is in the amount of $ _____, including the amount of $ _____for the cost of engineering, which may be inclusive of preliminary engineering authorized on Month Day, Year, including the amount of $ _____ for the cost of inspection provided by the Utility, including the amount of $ _____ for the cost of betterment to the Utility's facilities (hereinafter called the "Betterment Cost"), and including the amount of $ _____for deposit for the utility work in the State contract, and of which _____ percent represents the pro-rata share to which the Utility is entitled to reimbursement for relocation of utility facilities located on private utility right-of-way, and _____percent represents the pro-rata share for relocation of utility facilities located on public highway right-of-way, reimbursement being for the cost of construction, engineering, and inspection on private utility right-of-way, but excluding inspection on public highway right-of-way, betterment, and the cost over the maximum TDOT reimbursement amount; and

*** Utility owners are responsible for 100% of betterment costs

**** TDOT is responsible for 100% of all relocation costs for utilities that are on private easement.

CIRCULAR LETTER

SECTION: **105.07 COOPERATION WITH UTILITIES (RAILROADS)**
NUMBER: **105.07-03**
SUBJECT: **RAILROAD/HIGHWAY GRADE CROSSING SAFETY PROJECTS**
DATE: **MAY 15, 2002**

The following procedures for project control and inspection for Safety Projects programmed under Section 203 and 230 of the 1973 Highway Safety Act and TCA 65-11-113 and 114 (Prefix RRP, RRO).

1. The Utilities Engineer will provide the District Operations Engineer with the approved plans and specifications, approved estimate of costs and agreement executed between Tennessee Department of Transportation and Railroad Company and approved by Federal Highway Administration.
2. The Regional Operations Engineer will assign a District Operations Engineer to represent the Bureau of Operations and work directly with the railroad. The project supervisor will be provided copies of material outlined in paragraph one above e.
3. The District Operations Engineer will hold a pre-construction meeting with railroad company representatives when he is notified they are ready to begin installation of signals to discuss the scope of work and establish the date the railroad is to begin work. Daily inspection of the work by the railroad will not be performed, instead, a close out or final inspection will be held by the regional construction supervisor and the project supervisor with the railroad company to insure that the signals and related equipment have been installed in accordance with approved plans and specification and that required signing and markings have been installed by the Maintenance Division or local Government. Any extraordinary problems encountered by the railroad that will increase the cost of the project shall be discussed at this time, and an explanation written by the project supervisor for attachment to the railroad's invoice.
4. The District Operations Engineer will be required to endorse the railroad billing to the effect that work has been completed in accordance with approved plans and specifications.
5. These railroad billings will be handled for audit and payment as other railroad and utility bills. Final bills are not to be approved unless <u>all</u> work has been completed.
6. Upon project completion the attached form is to be filled out and transmitted to those individuals noted. On projects consisting of both signals and crossing work, completion notices are to be submitted only after <u>all</u> work is finished. On notices for projects consisting of signals only "N/A" is to be entered for the crossing pad.

Use of these procedures is limited to projects for the installation of flashing light signals and/or related highway markings and signing not a part of a highway construction project. Railroad adjustments and installation necessary to accommodate highway construction projects will be handled as they have been, and will be subject to inspection and record keeping as other utility adjustments.

CIRCULAR LETTER

SECTION: **105.07 COOPERATION WITH UTILITIES**
NUMBER: **105.07-04**
SUBJECT: **UTILITY DIARIES AND INSPECTION PROCEDURES**
DATE: **MAY 15, 2024**

On all projects requiring utility relocations, Form DT-0667 "Project Utility Diary" is to be used to document said relocations whether the work is reimbursable or not. When a utility is relocating at its own expense or under a lump sum reimbursement contract, the "Description of Work Performed" section will be the only notation required. The notation shall indicate if the relocation is a non-reimbursable or lump sum reimbursable contract.

1. Form DT-0667 is to be completed in the field by the utility inspector.
2. The Form should be distributed to the TDOT Field office, the utility company, and retained in the project file.

If the utility relocation is included in the state contract, the utility will be responsible for inspecting all phases of the relocation, per TCA 54-5-804, 2003 Public Chapter 86. The TDOT inspector shall document the utility work activities performed in the daily project diaries. The inspector provided by the utility company will:

1. Complete Form DT-0667 as described above and submit it each estimate period, as directed by the Team Lead. Along with the item descriptions, the inspector will include the quantities and stations of installed items.
2. Complete "Installed Item Certification" portion of Form DT-1716 and submit it each estimate period, as directed by the TDOT Team lead. This form will be signed to certify that the items installed during that estimate period met all applicable specifications.
3. Complete and attach Form DT-1716A to DT-1716 and submit it each estimate period, as directed by the TDOT Team Lead. This form will be used to summarize, by project number, the utility items installed during that estimate period. The TDOT inspector shall sign Form DT-1716A after ensuring it is consistent with the utility diaries and daily project diaries. The completed Form DT-1716A shall be referenced in the progress pay quantity documentation.
4. Complete "Final Acceptance of Work" portion of Form DT-1716 and submit it to the TDOT Field office when the utility relocation work is complete.
5.

PROJECT UTILITY DIARY
UTILITY ITEM CERTIFICATION/ACCEPTANCE – DT-1716
SUMMARY OF INSTALLED UTILITY ITEMS – DT-1716A

PROJECT UTILITY DIARY

CONTRACT NO:_____ RECORDED BY:_____ UTILITY COMPANY_____

PROJECT NO:_____ PROJECT ENGINEER_____ UTILITY CONTRACT NO._____

REF. NO:_____

DATE:_____

UTILITY REPRESENTATIVE:_____

(For "Work Order" Reimbursable Projects)

DESCRIPTION OF WORK PERFORMED

LABOR

NAME	CLASSIFICATION	HOURS

LABOR USED TO RESTORE RECOVERED MATERIAL TO SUITABLE CONDITION FOR REUSE SHOULD BE INCLUDED ON THIS REPORT.

MATERIALS REMOVED

ITEM	U.S.	QUANTITY

IF BOTH PARTIES AGREE THAT MATERIAL IS NOT SALVAGEABLE, A CHECK IS TO BE ENTERED IN THE U.S. COLUMN

MATERIALS USED

ITEM	QUANTITY

TRANSPORTATION AND EQUIPMENT

TYPE	HOURS	MILES

REV: 7/17

UTILITY ITEM CERTIFICATION/FINAL ACCEPTANCE

Contract Number: _____ **Utility Company:** _____

Project Number(s): _____ **Utility Inspector:** _____
Print

_____

County(ies): _____

_____

Instructions: Please check appropriate box (or boxes) and fill out required information. For **Installed Item Certification**, attach **Summary of Installed Utility Items** sheet(s) for each project number and submit each estimate period as directed by the TDOT District Operations Supervisor**.**

☐ **Installed Item Certification**

On behalf of the above utility company, I certify that the materials used for the item(s) listed on the following page(s) meet and were installed in accordance with all applicable specifications. Any pertinent shop drawings or engineering changes have been approved.

Estimate Period: _____ **to** _____

_____ _____
Utility Inspector Signature **Date**

☐ **Final Acceptance of Work**

I certify that the utility relocation work is complete and is accepted by the above utility company.

_____ _____
Utility Inspector Signature **Date**

SUMMARY OF INSTALLED UTILITY ITEMS

Contract Number: _____ **Utility Company:** _____

Project Number: _____ **Utility Inspector:** _____
Print

County: _____ **TDOT Inspector:** _____
Signature

Estimate Period: _____ **to** _____

Item Number	Description	Unit	Installed Quantity

Page _____of _____

DT-1716A
7-14-17

CIRCULAR LETTER

SECTION: **105.07 COOPERATION WITH UTILITIES (RAILROADS)**
NUMBER: **105.07-05**
SUBJECT: **CSX RAILROAD**
DATE: **MAY 15, 2024**

In order to finalize handling and updating records concerning overpass projects, CSX Transportation, Inc. would like to be advised of the final inspection date in order to participate if desired.

They also wish to be advised in writing, as to the date the structure was completed and opened to traffic.

In order for the Structures Division to certify "As Built" clearances, upon completion of the structure the Team Lead shall request the Regional Bridge Inspection to conduct his initial inspection of the bridge.

Correspondence relative to the above should be directed as follows with copies to appropriate Department personnel:

Mr. Todd Allton
Project Manager II Public Projects GA, SC, TN
CSX Transportation
1590 Marietta Blvd NW
Atlanta, GA 30318
O. 404.350.5134
F. 904.245.3183
E. Todd_Allton@csx.com

CIRCULAR LETTER

SECTION: **105.07 COOPERATION WITH UTILITIES (RAILROADS)**
NUMBER: **105.07-06**
SUBJECT: **RAILROAD FLAGGING SERVICES**
DATE: **JANUARY 1, 2010**

The railroad flagging services for certain projects will be paid by the Department effective for the December 3, 1993 letting. The payment, when required, for flagging services will be specified by Special Provision 105C. The Department will pay for all verified flagging required up to the number of specified flagging days stipulated in Special Provision 105C. The Special Provision states that the Contractor and the Department shall sign the Railroad's time sheets in order to verify the presence of the flagman for a particular day. The Engineer's verification of the time sheets should check for the need of a flagman on a particular day, confirm that the contractor has provided proper notification for the presence of a flagman and confirming the actual flagging hours as noted in the Special Provision. **At all times and in all cases, the Railroad reserves the right and authority to determine when, where and if flagging services are required on a State Highway Project.** Flagging services for work that is not required by the contract (temporary crossings, etc.) will not be paid by the Department. The Utilities section will receive and forward all billing information to the Project Engineer for verification. The payment to the Railroad for flagging will be the responsibility of the utilities Section. However, if the days of flagging services required extend beyond the number of days allotted, the costs of such additional flagging shall be deducted from the Contractor as specified in the Special Provision. The Project Engineer shall make this deduction when he receives the billing information from the Utilities Section. This deduction should be clearly defined in the billing information.

In addition, on projects where the flagging will be paid by the Department, a final inspection in accordance with Subsection 105.13 of the Standard Specifications shall be made for the work that is within the limits of the Railroad. This inspection shall include a representative of the Railroad and once the work is accepted the Railroad shall sign the attached completion notice on the date of final inspection. It is imperative that this inspection is documented because the Railroad has 365 days after this date to submit all billing that is reimbursable by the Department.

Date: _____

Utility Manager
Utilities Section
600 James K. Polk Building
Nashville, TN 37219

Re: Completion Notice of Work within the limits of the Railroad

Federal Project No. _____

State Project No. _____

County _____

Dear Sir:

This notice is to confirm the acceptance of all work within the limits of the Railroad in accordance with Subsection 105.13 of the Standard Specifications.

Date of Railroad Inspection _____

Inspected by Railroad Representative _____

Inspected by D.O.T. Representative _____

Sincerely,

Project Supervisor

cc: Regional Construction Supervisor
Railroad
Contractor
Director of Construction
Finance Office

CIRCULAR LETTER

SECTION: **105.07 COOPERATION WITH UTILITIES**
NUMBER: **105.07-07**
SUBJECT: **FINAL INVOICES FROM UTILITIES AND RAILROADS**
DATE: **MAY 15, 2024**

In order to enforce the timely receipt of final invoices from Utilities and Railroads for their work performed on highway construction projects, Team Leads are hereby advised to notify the appropriate Regional Utilities Office of the date the Utility or Railroad work was completed on the project immediately following completion of said work. Once the Regional Utilities Office is notified of the completion date, the Utility or Railroad will be notified that a final invoice for the work performed is needed. This will be identified as the official beginning of the one-year time limit for reimbursement which will be monitored and enforced.

CIRCULAR LETTER

SECTION: **105.07 COOPERATION WITH UTILITIES**
NUMBER: **105.07-08**
SUBJECT: **CONSTRUCTION UTILITY COMPLIANCE/NON-COMPLIANCE WITH UTILITY CONTRACT**
DATE: **JULY 12, 2018**

TCA 54-5-804 Allows for TDOT and Utility Companies to enter into a contract to move utility facilities which are in conflict with TDOT Construction Projects.

During the development of Right-of-Way plans, the Utility Division begins the process of utility coordination with all Utilities that will be affected by the proposed construction project. There are several steps that the Utility must take regarding reimbursement and some Utilities may decide to relocate prior to construction, at no cost to the State.

For those who do request reimbursement, TDOT will enter into one of the following types of contracts:

- Percentage Contract (Move Prior or Move in State Contract) %Public/% Private
- Chapter 86 Move Prior
- Chapter 86 Move in State Contract
- Easement Replacement
- Pipelines (special contracts for transmission pipelines)

For <u>all</u> Move Prior Contracts, the Utility is responsible for:

- Notifying TDOT Construction (Project Supervisor or Regional Construction) of the intended date to begin utility relocation construction no less than 3 days prior to beginning work
- Surveying (including, but not limited to staking the ROW)
- Clearing and grubbing (must have TDOT authorization)
- Coordinating the relocation
- Constructing the relocation
- Providing all environmental permits (Notice of Coverage, etc.)
- Providing environmental inspection as required by permits
- Providing EPSC
- Disposing of waste
- Traffic Control
- Providing utility easements
- Meeting Buy America requirements
- Moving all utility services prior to the letting date of the construction contract (proposed letting date provided to utility in the Go-to-Work Authorization)
  NOTE: This only applies to Chapter 86 projects move prior to letting date. All contracts are subject to the approved Schedule of Calendar Days.

Once the Utility has completed the Chapter 86 Move Prior work, in order to receive reimbursement, the Utility must submit:

1. Invoice to the Regional Utility Office
2. Contract Obligation Certification to both the Project Supervisor and the Regional Utility Office

The Project Supervisor has three options when signing the Contract Obligation Certification:

1. Accepting Certification as submitted.
2. Accepting Certification pending Final Verification by project staking: the Utility will not be reimbursed until Construction work begins and project staking has verified that the Utility has been relocated in accordance with the approved Utility plans.
3. Denying Certification as submitted with documented reasons.

The Regional Utility office will not pay for the relocation until receipt of approval from the Project Supervisor (approval of the invoice and a signed Contract Obligation Certification).

Schedule of Calendar Days Violations – ALL Utility Relocation Contracts

When the Utility fails to complete work within the approved schedule of calendar days, creating a conflict or delay to the construction project, TCA 54-5-854 (h)(1)(A) allows for TDOT to collect a civil penalty from the Utility Owner.

To enforce the civil penalty, due process must be provided. To fulfill that requirement, notification must be provide to the utility that they are considered to be in violation, and provide a deadline date for the utility to take corrective action.

It should be noted that if the Project Supervisor signed the "Certification Contract Obligation" signifying that the utility met its obligation to Move Prior, it will severely limit the ability to enforce the utility fine for delays to the project.

The Project Supervisor will be the lead as the project site authority who determines the utility is causing delays as a result of the state of non-compliance, and as the authority on site to coordinate the work necessary to rectify the deficiencies. If the Field Office has a consultant Utility Coordinator assigned to the project, that firm may be the Project Supervisor representative for the following actions:

1) TDOT Construction Project Manager notifies the Utility of issues. The Project Supervisor determines that there is a delay as a result of the required utility relocation construction. As a general course of business, the Project Supervisor should communicate to the utility representative of record or the utility site foreman/supervisor that the utility relocation is causing delays to the project. Any documentation detailing correspondence, oral discussions, meetings, or other efforts to notify the utility of the issues should be collected and entered into a record of the proceedings related to the utility compliance.

2) **TDOT Construction notifies Regional Utility Office of utility issues.** The Project Supervisor should notify the Regional Utility Office of the issues, and they can assist in providing proper contact information, documentation of coordination including the contract, schedule of calendar days, authorization Put To Work date, and may be able to assist in communications between the utility management and the Project Supervisor to resolve the issues. The Project Supervisor should have available the Schedule of Calendar days and the Utility Put To Work authorization which is in the package provided by the Regional Utility Office to the Project Supervisor at the preconstruction meeting. The Put To Work authorization is the beginning date of the Schedule of Calendar days, which will designate the number of calendar days approved for the utility relocation. The Regional Utility Office can be requested to assist the Project Supervisor in making that assessment.

3) **TDOT Construction arrange meeting with Utilities to discuss issues.** The Project Supervisor will convene a meeting with all representatives of utilities on the project, along with the State Contractor. The Regional Utility Office can be requested to attend to provide any support the Project Supervisor may need. With all the stakeholders in attendance, any issues raised regarding the relocation for the utility that is not in compliance can be addressed at the meeting with all stakeholders present. The meeting will determine a deadline date for the utility to complete the relocation necessary for the State Contractor to proceed without delay.

4) **TDOT Construction issues written summary of meeting setting deadline or Utility to comply, citing TCA 54-5-854(h).** Minutes of the meeting will document the issues, discussions, and the deadline date for the utilities identified to come into compliance. TCA 54-5-854(h) is to be cited as the consequences if the utility does not comply by the deadline. (See sample letter) The Project Supervisor should contact the Regional Utility Office to obtain the current contact information for the utility. Generally the Project Supervisor will, up to this point, be communicating with the Utility representative or foreman on site. To provide proper notification, the Project Supervisor will need to send the letter to the utility management via verified mail receipt along with the minutes of the meeting. This eliminates any defense that the utility management was unaware of the pending action.

5) **TDOT Construction notifies Regional Utility Office if deadline is not met.** On the date of the deadline, if the utility is not in compliance, it has not completed the work discussed and documented in the meeting minutes, the Project Supervisor will transmit a request to the Regional Utility Office to proceed with actions to fine the utility per the state statute.

6) **Regional Utility Office reviews and submits documentation to HQ Utility Office.** The Regional Utility Office, being familiar with the issue and actions taken by the Project Supervisor, will review and if appropriately documented, place the documentation on FILENET, and electronically submit the approved request to the HQ State Utility Coordinator and their assistant for the region as soon as practical.

7) **HQ Utility Office reviews and submits to TDOT Legal Office for action.** HQ assistant will review, and if appropriately documented, submit the request to the TDOT Legal Office recommending that action be taken to fine the utility per state statute TCA 54-5-854(h). The Legal Office will send the owner written intent to assess a civil penalty per TCA 54-5-854(h)(4).

Standard Forms:

Utility – Standard NOV Letter

Utility – Certification Contract Obligation

Certification Contract Obligation

Date: _____

TDOT Region ____ Construction Office
Region

Attn: _____, Project Engineer
Address _____

_____
(Information is provided on the Utility Begin Work Authorization letter)

PROJECT#/S: _____ **COUNTY/S:** _____
_____ _____

FEDERAL: _____ **PIN #:** _____
DESCRIPTION: _____
UTILITY CONTRACT: #_____

The utility completed on _____ **(date of completion) the utility relocation in accordance with the approved relocation plans for the above referenced project number prior to the date specified and in accordance with the executed contract referenced.**

NOTE EXCEPTIONS:
Maintaining services to business and/or residences is attached.

Signature indicates this individual has the legal authority to sign contracts and agreements to obligate the utility

Signed: _____ Date: _____
Utility representative

Print Name: _____

Title: _____

Utility Name: _____

Address: _____

City, State, Zip: _____

Phone Number: _____

Fax Number: _____

E-Mail: _____

Utility Type:
- ☐ Water
- ☐ Sewer
- ☐ Power
- ☐ Gas
- ☐ Telephone
- ☐ CATV
- ☐ Other:_____

_____

TDOT USE ONLY: ☐ This Certification letter is accepted

☐ This Certification letter is accepted pending Final Verification by project staking.

☐ This Certification letter is not accepted. Reason: _____

_____

_____

Signed: _____ **Date:** _____
TDOT Construction office representative

CC: TDOT Construction Project File
TDOT Regional Utility Office

CC: **Utility's File**
TDOT Regional Utilities Office

Certification Exceptions:

The following business and/or residences on proposed State right-of-way have not been vacated at the time of the relocation, and utility services are being maintained temporarily. Upon written notice to the utility contact listed below, the utility will relocate the services indicated within the period of time specified. The State may retain final payment until the utility fulfills this obligation.

State Proj. Tract No.	Type of Occupied property (Residence / Business)	Type of Utility Service (water,sewer,gas, electric,CATV)	Address (Of occupied residence / business)	Period of time utility obligates to remove facility (Calendar days)
				days
				days
				days
				days
				days
				days
				days
				days
				days
				days
				days
				days
				days
				days
				days

Date

Anywhere Utility District
P. O. Box 1234567
Highway
Chattanooga, TN 37422

RE: **NOTICE OF VIOLATION**
Waterline Relocation
TDOT Project # 33333-2222-04

Dear Mr. Doe:

It has been brought to my attention that **Anywhere Utility District** is in violation of TCA 54-5-854. Your utility is being put on Notice that the follow violations have been made:

1. The approved "Schedule of Calendar Days" has been exceeded and your utility's facility relocations are not completed.
2. Your utility has never submitted a monthly progress report to the Department per state statute TCA 54-5-854(h)(3).
3. Your utility has not undertaken its relocation as originally approved by the Department.

Should these issues not be resolved on or before **Date**, the Department will proceed with its highway construction without liability for damage to **Anywhere Utility District's** facilities pursuant to TCA 54-5-854(g). Additionally, a civil penalty up to five hundred dollars ($500) for each day after the scheduled completion date that you fail to complete the required relocation could be imposed. Hopefully, these issues can be resolved. We look forward to working with you to solve these problems.

Sincerely,

Project Supervisor
TDOT Region X Construction Office

Cc: Regional Utility Office
Regional Operations Director
Regional Operations Engineer
Project File

CIRCULAR LETTER

SECTION: **105.07 COOPERATION WITH UTILITIES (RAILROADS)**
NUMBER: **105.07-09**
SUBJECT: **RAILROAD FLAGGING SERVICES (NORFOLK SOUTHERN RAILWAY)**
DATE: **JUNE 1, 2023**

For projects that take place on or adjacent to the Norfolk Southern Railway Company (NS) right-of-way and/or have the potential to foul the Railroad's track or operations, the flagging services shall be furnished and maintained by the Contractor as required by the NS. The payment for services, when required, will be specified by Special Provision 105C(SP105C). The Department will pay for all verified services required up to the number of specified days stipulated in SP105C. The Engineer should verify the need for the services on a particular day, confirm that the contractor has provided proper notification for the presence and confirmed the actual services as noted in the SP105C. Services for work that is not required by the contract (temporary crossings, etc.) will not be paid by the Department. No payment will be made to the Contractor for costs of services that are required in excess of the allotted days stipulated in SP105C.

In addition, on projects where the flagging will be paid by the Department, a final inspection in accordance with Subsection 105.13 of the Standard Specifications shall be made for the work that is within the limits of the Railroad. This inspection shall include a representative of the Railroad and once the work is accepted the Railroad shall sign the attached completion notice on the date of final inspection.

SP105C stipulates the following information for:

8. CONTRACTOR PROTECTIVE SERVICES

1. Qualified protective services are those services of a contractor, directly hired by the Prime Contractor, that have been vetted through the Railroad and are allowed to be performed on Railroad property.
2. Contractor Protective Services shall be onsite anytime construction activities are taking place on or adjacent to the Railroad Property and/or have the potential to foul the Railroad's track or operations.
3. Contractor Protective Services shall be those services of a subcontractor to the Contractor who have the ability to fully protect the Contractor's workers and machinery once the qualified protective services contractor confirms the Contractor Protective Services are properly equipped and site specific trained by the Railroad Representative. Contractor Protective Services may act as an observer until such Contractor Protective Services are site specific trained by the Railroad Representative. The reference to an "observer" is defined as a person who has the authority to deny access to Contractor's workers and machinery to a specified Railroad operation zone as directed to the qualified protective services contractor by Railroad and prevent those potential to foul work events which may put the Contractor's workers and machinery at risk for injury or damage.
4. Contractor Protective Services will not be allowed on the property until all items on the Norfolk Southern Checklist for Construction- Direct Hire have been completed and the authorization to proceed is given by the Railroad Engineer.
5. Under the terms of the agreement between the Sponsor and the Railroad, the Railroad has sole authority to determine the need for any Railroad Protective Services required to protect its operations or work designated to be done by the Railroad through the force account estimate.

Date: _____

Utility Manager
Utilities Section
600 James K. Polk Building
Nashville, TN 37219

Re: Completion Notice of Work within the limits of the Railroad

Federal Project No. _____

State Project No. _____

County _____

Dear Sir:

This notice is to confirm the acceptance of all work within the limits of the Railroad in accordance with Subsection 105.13 of the Standard Specifications.

Date of Railroad Inspection _____

Inspected by Railroad Representative _____

Inspected by D.O.T. Representative _____

Sincerely,

Project Supervisor

cc: Region Construction
Railroad
Contractor
Director of Construction
Finance Office

CIRCULAR LETTER

SECTION: **105.11 INSPECTION OF WORK**
NUMBER: **105.11-01**
SUBJECT: **TDOT INSPECTION RESPONSIBILITIES ON LOCAL PROGRAMS PROJECTS**
DATE: **MAY 22, 2024**

In accordance with the TDOT and FHWA Stewardship Agreement, for Local Agency Projects:

> "TDOT is responsible for assuring that all Federal-aid projects administered by local agencies comply with all applicable Federal and State requirements. TDOT is not relieved of this responsibility even though the project may be delegated to the local agency. In accordance with 23 CFR 1.11, TDOT is responsible for ensuring that the local agency is qualified and equipped to administer the project and has processes in place to ensure compliance with federal requirements."

In order to assure adequate construction and materials acceptance and testing, TDOT will have an active oversight responsibility in the pre-construction and construction of these local projects.

The District Manager will assign a **TDOT representative** to participate in the project pre-construction meeting, to conduct routine project reviews, to attend quarterly progress meetings, and to participate in the final inspection as required in the Oversight and Frequency table below. When TDOT is conducting the routine project review and final inspection, the **Local Government Representative** responsible for the project shall be present. It is also preferable that the CEI be present during the reviews. The TDOT representative shall assure the quality of construction, completion of contract requirements, and project record keeping are satisfactory.

Required oversight and frequency (note these are minimum frequencies and more inspections may be needed if problems persist):

Project Amount	Pre-construction meeting	Project Reviews/Inspections during construction	Final Inspection
< $250,000	Required	Required- 1 inspection minimum	Required
$250,000 - $2,000,000	Required	•Duration < 4 months- Recommend 1 per month, but must do at least 1 •Duration 4-8 months, recommend 1 per month, but must do at least 3 inspections at least 1 month apart • Duration > 8 months, Required every 4-6 weeks	Required
>$2,000,000	Required	Required 1 per month minimum.	Required

To document TDOT's oversight activities, the Local Programs Inspection form shall be completed during each project review. All findings, satisfactory or not, shall be documented in the inspection report. The inspector must document what was observed and its acceptability in the "comments" section (e.g. all certified payrolls were on file and wage rates comply with contract). It is required to attach supporting documentation when a negative finding is made. A closeout meeting with the Local Government Representative and CEI (if applicable) will be required to discuss the findings.

A **TDOT Local Materials and Tests Field Services representative** shall conduct all Independent Assurance testing on the local project in accordance with TDOT SOP 1-2.

The assigned **TDOT representative and Local Materials and Tests Field Services representative** shall work together and shall attend and participate in the mandatory preconstruction meeting to explain TDOT expectations. These TDOT representatives are the "eyes and ears" for TDOT and must assure that the project is completed in accordance with the federal regulations just as though it is a TDOT project with federal funds.

The local entity and their CEI will have the day to day responsibility and authority for construction inspection and material acceptance.

The **TDOT Local Programs Office,** is responsible for project oversight on Enhancement Projects (except the construction of bicycle and pedestrian facilities) and buildings.

Additional inspection requirements and guidelines:

- As noted the Local Government Representative shall be present during the project review
- Once the review is completed, there shall be a close out meeting with the Local Government Representative and the CEI to discuss and explain the findings needing to be resolved and the expectations of TDOT. A copy of the completed inspection report should be distributed at that time, if not complete, a copy shall be provided as soon as available, preferably within 2 business days.
    - All findings should be resolved on the project site if possible.
    - Findings that cannot be resolved on the project site should be raised to the District Manager\. The Local Programs Office and Headquarters Construction should be used to resolve problems that cannot be resolved at the Regional level.

- The Local Government Representative will be responsible for responding, in writing, to the findings made in the inspection report. Corrective actions taken need to be documented.

Circular Letter

Section: 105.15
Number: 105.15-01
Subject: COMPLETION NOTICE DISTRIBUTION
Date: MAY 17, 2024

Regional Completion Notices shall be sent to the following either by Email or USPS mail:**

Contractor
Surety
District Manager
Director of Regional Operations
Regional Utilities Office
Regional Bridge Engineer
Regional Safety Office

Director of Construction	TDOT.HQConstNotices@tn.gov
Construction/Maintenance Contracts	Timothy.Colvett@tn.gov
Contract Payments Section	Ryan.Boling@tn.gov
Office of the Chief Financial Officer	Thomas.Naive@tn.gov
Roadway Design Division	TDOT.DesignFileRoom@tn.gov
Materials & Tests Division	TDOT.MaterialsTests@tn.gov
Structures Division	TDOT.Structures@tn.gov
Program Development & Scheduling Office	TDOT.Scheduling@tn.gov
Right of Way Division	TDOT.HQ.ROW@tn.gov
Environmental Permits	TDOT.Env.NPDES@tn.gov
Environmental-Ecology & Permits Office	Robbie.Stephens@tn.gov
Program Operations Office	John.Kahle@tn.gov
Program Operations Office	Bonita.Dunlap@tn.gov
Strategic Transportation Investments Division	Terry.Gladden@tn.gov
Long Range Planning Division	Matt.Meservy@tn.gov
Labor Standards Unit/Prevailing Wage Commission	Rachel.Tate@tn.gov

**The above listed contacts are the minimum individuals that completion notices must be sent to. Individual Regions may have others that request to receive this document and need to be added to their separate list of recipients.

CIRCULAR LETTER

SECTION: **105.16 REQUEST FOR EQUITABLE ADJUSTMENT (REA) AND DISPUTES**
NUMBER: **105.16-01**
SUBJECT: **REA PROCESS**
DATE: **AUGUST 21, 2023**

Supplemental Specification **104.03.C** states the Contractor will, upon request, have an opportunity to discuss the Contract change by informal meeting with the Department's Regional representatives associated with the change prior to the issuance of the Engineer's written response. If such a meeting is held, the Contractor shall use the opportunity to present relevant information and respond to any information provided by the Engineer or other Department officials with knowledge of the Work.

When a change is necessary, the Engineer will make appropriate adjustments to the Contract price and time, if warranted, in accordance with **108.07, 109.04, 109.05.A,** and **109.06.** If the Contractor disagrees with the Engineer's decision or does not agree with the Contract adjustments, the Contractor may pursue the issue as a Request for Equitable Adjustment in accordance with Supplemental Specification **105.16.**

104.03: Contract Change Notification

A. Written Notification by Contractor

B. Written Acknowledgement by Engineer (10 calendar days)

C. Written Response by Engineer

1. Contract Time > 180 days or
   Original Contract Amount > $200,000
   (30 calendar days)
   Involved with decision; District Leadership, Regional Leadership, HQ Construction Division, and other personnel as needed.
2. Contract Time > 90 days <= 180 days or
   Original Contract Amount > $100,000 <= $200,000 or > 10%
   (21 calendar days)
   Involved with decision; District Leadership, Regional Leadership, and other Regional personnel as needed.
3. Contract Time <= 90 days or
   Original Contract Amount <= $100,000 or <= 10%
   (14 calendar days)
   Involved with decision; District Leadership, and other Regional personnel as needed.

105.16: Request for Equitable Adjustment (REA) and Disputes

A. **Notice of Intent to File a REA** Submitted to Headquarters Construction

B. **Submission of REA** (60 calendar days)

C. **REA Informal Meeting** (30 calendar days)
Involved with meeting; District Leadership, Regional Leadership, HQ Construction Division, and other Divisions as needed.

D. **Department Decision** (60 calendar days)
Involved with decision; District Leadership, Regional Leadership, HQ Construction Division, and other Divisions as needed.

CIRCULAR LETTER

SECTION: **106 BUILD AMERICA BUY AMERICA ACT (BABA)**
NUMBER: **106.01**
SUBJECT: **BUILD AMERICA BUY AMERICA ACT**
DATE: **JANUARY 1, 2024**

Per Special Provision **106BA**, Contractors are required to provide certifications that materials to be permanently incorporated into the project meet Build America, Buy America requirements and are produced in the United States.

The contractor shall Provide certifications to the Engineer prior to using the products and/or materials on the project. Assure all submittals meet Build America, Buy America prior to the products and/or materials being incorporated in the project. Materials and Tests Division Standard Operating Procedures **(SOP) 1-8** lists materials by material code and should be used as a resource to verify certifications meet BABA requirements.

If the Contractor submits documentation for a product or material not listed in SOP 1-8, contact the Materials and Tests Division for assistance prior to using the product or material.

The Contractor shall be responsible for all cost associated with products that are permanently incorporated into the project that do not meet the requirements of this Special Provision without prior written approval from the Department, up to and including removal and replacement.

A. Iron and steel: See **SP106A** Regarding Buy America (there are no changes to existing requirements)

B. Manufactured products: Currently covered under FHWA Buy America Final Rule 11/25/1983, 48 FR 53099; Waiver for Manufactured Products. If needed, use SOP 1-8 as a guide for determining manufactured products.

C. Construction materials: Use **SOP 1-8** as a guide for determining construction materials.

The BABA's DOT Waiver of Buy America Requirements for De Minimis Costs requirements:

The total value of the noncompliant products is no more than the lesser of $1,000,000 or 5% of total applicable costs for the project.

- **Total value of non-compliant products.** In applying the waiver, the "total value of the non-compliant products" does not include the value of those products subject to a separate Buy America Waiver. **(Manufactured Products are not included and SP106A steel and iron products not included) (Costs do not include installation on the project site, profits. Only costs to the Manufacturer or to the Project Site)**

- **Total applicable project costs.** The cost of materials (including the cost of any manufactured products) used in the project that are subject to a domestic preference requirement, including materials that are within the scope of an existing waiver. **(Includes Manufactured Products, but not SP106A steel and iron products) (Costs do not include installation on the project site, profits. Only costs to the Manufacturer or to the Project Site))**

The Contractor shall provide certifications, material documents, and cost calculations to the Engineer for all of the noncompliant products anticipated to be used in the project before being incorporated.

The Contractor shall be responsible for all cost associated with products that are permanently incorporated into the project that do not meet the requirements of this Special Provisions without prior written approval from the Department, up to and including removal and replacement.

CIRCULAR LETTER

SECTION: **107.01 LAWS TO BE OBSERVED**
NUMBER: **107.01-01**
SUBJECT: **CONTRACTOR EMPLOYEE SAFETY AND HEALTH PROGRAM**
DATE: **MARCH 1, 2024**

Construction Contracts:

At the preconstruction meeting, the Contractor shall submit to the Team Lead written certification of an Employee Safety and Health Program (ESHP). The ESHP shall be developed by a safety professional with a minimum of 30 hours OSHA Construction Training. The Team Lead shall verify that the certification letter includes (at a minimum) the following:

1. Certification that the ESHP meets or exceeds all Federal, State, and local Safety and Health Standards.
2. Listing of the qualifications of the **safety professional** responsible for developing and maintaining the ESHP.
3. Name and 24/7 contact information of the **management level personnel** responsible for managing and implementing the ESHP for the contractor.
4. Name and 24/7 contact information for the **supervisory level personnel** responsible for implementing and monitoring the ESHP at the construction site.
5. Name and 24/7 contact information of the **Traffic Control Coordinator**.
6. Certification that all **sub-contractors** have a safety program.

The Certification letter must be submitted to the Team Lead before any work commences on the project.

Maintenance Contracts:

Includes on-call guardrail, sweeping, on-call striping/retracing, litter removal, tree services, mowing, and work performed at Welcome Centers and Rest Stops.

Prior to work beginning, the Maintenance Contractor must submit a Certification of an ESHP to the Team Lead. The Certification shall include (at a minimum):

1. Certification that the ESHP was developed by a safety professional with 30 hours of OSHA Construction Training.
2. Certification that the ESHP covers the unique and specific hazards for the type of work listed above and that a Hazard Communication Program is part of the ESHP.
3. Name and 24/7 contact information of the Safety professional responsible for developing and maintaining the ESHP.
4. Name and 24/7 contact information of the Traffic Control and Safety Supervisor who has the authority to stop work on the project.

For all Contracts:

If an incident occurs on a construction/maintenance project that requires hospitalizations, or TOSHA Citation to be submitted, the Contractor shall send notification of the incident to the Team Lead who will forward to the Regional Safety Office.

CIRCULAR LETTER

SECTION: **107.08 PROTECTION OF STREAMS, LAKES AND RESERVOIRS**
NUMBER: **107.08-01**
SUBJECT: **NOTICE OF TERMINATION PROCESS FOR ENVIRONMENTAL PERMITS**
DATE: **FEBRUARY 9, 2022**

Final Environmental Permit Termination Process

The Contractor shall not be released from the project until the NOTs for TDEC's Water Quality permits, TDEC Stormwater Permit and the USACE permit, as applicable, have all been terminated.

A. Construction General Permit (CGP) Notice of Termination (NOT)

For all projects with a NPDES permit (CGP) where land disturbing activities are complete, the Operations District Supervisor (ODS) (or designee) shall check the following.

1. The project meets the definition of "Final Stabilization", as specified in the CGP.
2. The contractor has removed all temporary erosion prevention and sediment control (EPSC) measures.

Once these criteria have been met, the ODS (or designee) shall contact the Regional Environmental Technical Office (ETO), the Contractor (or appointed representative), the TDOT inspector (either in-house or consultant hired), TDOT EPSC inspector, and the QA Inspector for the specific project to conduct the final Environmental QA Inspection for concurrence of final stabilization. If concurrence is reached by all parties, the QA inspector will document this concurrence within the final Environmental QA report.

If concurrence is not achieved, one of the following options shall be chosen:

1. The Contractor shall complete all repairs necessary to achieve final stabilization and repeat the review process.
2. If a situation occurs where an agreement cannot be reached regarding a project's final stabilization, the Environmental Division's Compliance and Field Services Section may contact the appropriate TDEC Environmental Field Office for a regulatory determination.

Once the final Environmental QA report is posted at the designated location (e.g., Stormwater Drive), the ODS (or designee) shall notify the Operations District Engineer (ODE) (or designee) within one week of the posting.

The CGP NOT shall be completed and submitted within 30 calendar days of the posting of the final QA Report.

The CGP NOT Form CN-1175 shall be completed and signed by the ODE (or designee). The description of the project for the NOT shall include the language as it appears on the Notice of Coverage (NOC) (including the NPDES tracking number and contract number) in the contract proposal, and the information requested.

The ODE (or designee) shall submit the completed form to the Regional ETO.

The completed CGP NOT request shall be submitted by the Regional ETO to the appropriate address found on the NOT form, with copies sent to the following parties:

1. Operations District Engineer
2. Operations District Supervisor
3. Contractor responsible party
4. QA Inspector
5. Compliance Field Section (TDOT.Env.FieldServices@tn.gov)
6. EPSC inspector
7. Regional Director of Operations
8. Operations Regional Engineer
9. NPDES email account (TDOT.Env.NPDES@tn.gov)
10. Select Appropriate Regional Environmental Technical Office:

R1.EnvTechOffice@tn.gov	Ecology and Storm Water Permit
R2.EnvTechOffice@tn.gov	Ecology and Storm Water Permit
R3.EnvTechOffice@tn.gov	Ecology and Storm Water Permit
R4.EnvTechOffice@tn.gov	Ecology and Storm Water Permit

B. TDEC Aquatic Resource Alteration Permit (ARAP) Notice of Termination (NOT)

For projects with general ARAP(s) where permitted work is complete at all locations and the project has reached final stabilization, the ODS (or designee) shall check that:

1. All permitted activities have been completed according to the terms and conditions of the permit
2. Any special permit conditions have been met
3. No unauthorized work has occurred.

Individual ARAPs do not need to be terminated.

Once these criteria have been met, the ODS (or designee) shall contact the Regional ETO, the Contractor (or appointed representative), the TDOT inspector (either in-house or consultant hired), TDOT EPSC inspector, and the QA inspector for concurrence that all permitted work is complete and in compliance at each permitted site. If concurrence is reached by all parties, the QA inspector will document this concurrence in the QA Inspection Report.

If concurrence is not achieved, one of the following options shall be chosen:

1. The Contractor shall complete all repairs necessary to achieve permit close out and repeat the review process.
2. If a situation is reached where an agreement cannot be reached regarding completion of the permitted activity, the Environmental Division's Compliance and Field Services Section may contact the appropriate TDEC for a regulatory determination.

Once the final Environmental QA report is posted at the designated location (e.g., Stormwater Drive), the ODS (or designee) shall notify the ODE (or designee) within one week of the posting.

The ARAP NOT shall be completed and submitted within 30 calendar days of the posting of the final QA Report.

The ARAP NOT Form CN-1450 shall be completed and signed by the Regional ETO. The description of the project for the NOT shall include the language as it appears on the Notice of Coverage (NOC) (including the ARAP permit number, PIN, and contract number) in the contract proposal, and the information requested on the attached form.

The completed ARAP NOT request shall be submitted by the Regional ETO to the appropriate address found on the NOT form, with copies sent to the following:

1. Operations District Engineer
2. Operations District Supervisor
3. HQ Environmental Engineering Office (TDOT.Env.Permits@tn.gov)
4. Contractor responsible party
5. QA Inspector
6. Compliance Field Section (TDOT.Env.FieldServices@tn.gov)
7. EPSC Inspector
8. Operations Regional Engineer
9. Regional Director of Operations

C. U. S. Army Corp of Engineers (USACE) Section 404 Permit

For projects with a USACE Section 404 Permit/Nationwide Permit where permitted work is complete at all locations and the project has reached final stabilization, the ODS (or designee) shall check that:

1. All permitted activities have been completed according to the terms and conditions of the permit
2. Any special permit conditions have been met
3. Where the project contains a mitigation site, the USACE compliance field visit has occurred, and concurrence has been granted
4. No unauthorized work has occurred

5. For projects that contain a Mitigation Site, these additional steps will be followed at each site:
   - **a.** If the USACE permits contain the "As Built" requirement it is the responsibility of the contractor to develop the "As Built" plans as directed by and meeting the requirements of the USACE Permits. "As Built" requirements are for permitted features as specified in the USACE Permit, not the entire project.
   - **b.** Once the ODS (or designee) is satisfied that the "As Built" requirements have been met and that the mitigation site is in compliance with the permits and approved plans, submit the "As Built" documentation to the Regional ETO for review.
   - **c.** The Regional ETO shall review the "As Built" documentation for mitigation compliance and work with ODS to ensure all requirements have been met.
   - **d.** The Regional ETO will submit the "As Built" documentation to the HQ Mitigation Office for use in scheduling a USACE Field Compliance Inspection.
   - **e.** The USACE Field Compliance Inspection is focused only on the permitted areas, the roadway project may still be under construction when this field visit occurs.
   - **f.** The USACE findings from the Field Compliance Inspection must be addressed prior to completing the process.

Once these criteria have been met, the ODS (or designee) shall contact the Regional ETO, the Contractor (or appointed representative), the TDOT inspector (either in-house or consultant hired), the TDOT EPSC inspector and the QA inspector for concurrence that all permitted work is complete and in compliance at each permitted site. The ODS (or designee) should also submit the documentation showing the USACE has concurred that on-site mitigation sites are in compliance with the permits. The QA inspector will document this concurrence in the QA Inspection Report.

Once the final QA Inspection Report is posted at the designated location (e.g., Stormwater Drive), the ODS (or designee) shall notify the ODE (or designee) within one week of the posting.

The USACE termination request shall be completed and submitted within 30 calendar days of the posting of the final QA Report.

The USACE termination request shall be made on the USACE Compliance Certification form attached to the USACE permit. The Regional ETO shall complete and sign the form, ensuring that the permit number, PIN, and contract number are included. The USACE Compliance Certification shall be submitted by the Regional ETO to the address provided on the form, with copies sent to the following parties:

1. Operations District Engineer
2. Operations District Supervisor
3. Contractor responsible party
4. QA Inspector

5. Compliance Field Section (TDOT.Env.FieldServices@tn.gov)
6. EPSC Inspector
7. Operations Regional Engineer
8. Regional Director of Operations
9. Environmental Engineering Office (TDOT.Env.Permits@tn.gov)

Documentation from the USACE acknowledging the closure of the project will not be received. It should be assumed that the project will be closed when the USACE Compliance Certification form request is sent. If notified that the USACE is not in agreement with the termination request, notify the Environmental Division Field Services Section at TDOT.Env.FieldServices@tn.gov and the appropriate CFS Regional Supervisor.

CIRCULAR LETTER

SECTION: **107.08 PROTECTION OF STREAMS, LAKES AND RESERVOIRS**
NUMBER: **107.08-02**
SUBJECT: **ENVIRONMENTAL PERMIT MODIFICATION OR NEW PERMIT PROCESS**
DATE: **FEBRUARY 9, 2022**

This Circular Letter establishes the process for Operation's requesting construction changes in or around environmental features (streams, springs, seeps, sinkholes, wetlands, etc.) or discovery of an environmental feature within the construction area not originally identified in the plans or Environmental Boundary Report (EBR). When one of the above scenarios occurs, a permit modification or a new water quality permit might be required.

A. Permit Modification

If the project has water quality permits issued by Tennessee Department of Environment and Conservation (ARAP), United States Army Corps of Engineers (404) or Tennessee Valley Authority (Section 26a), a permit modification might be required if there are any deviations from the issued permits, including but not limited to the following:

1. New impacts are proposed to environmental feature(s)
2. The impact(s) increases above the permitted amount(s) including additional riprap
3. A bottomless structure (slab bridge) needs to be changed to a box culvert
4. A new environmental feature is discovered within the construction area.

B. New Permit

If water quality permits were not originally required for the project, a permit would be required if:

1. Impacts are proposed to environmental features
2. A new environmental feature is discovered within the construction area

Water Quality Permit

Water quality permits are required when impacts are proposed within the regulatory agency's jurisdictional areas: "Waters of The State" and/or "Waters of The United States" (i.e., perennial, and intermittent streams, wetlands, springs, sinkholes, etc.). Jurisdiction varies per agency around streams so any proposed alterations near the stream (stream channel, stream banks, and/or buffer zone) needs to be coordinated with the proper Environmental ETO before changing in the field.

Agency regulations require that proposed impacts must demonstrate avoidance and minimization when considering proposed changes to environmental features. When the impacts are unavoidable and exceeds regulatory thresholds, compensatory mitigation is required to offset the proposed changes.

During construction of the project, issues with site conditions, construction techniques, construction materials, or discovery of new environmental features may warrant the need for modification(s) to the issued water quality permits or a new water quality permit. However, additional impact to environmental features should be avoided and minimized to the maximum extent possible. **Environmental permits shall not be modified for construction convenience.**

A construction project may have one or more water quality permit sites within its termini. Any change to the information listed in the permit(s), or any environmental features discovered during construction, would require regulatory agency approval prior to any alteration or impact to aquatic resource. This regulatory agency approval would be granted through the modification of an existing permit or issuance of a new permit.

Permit Modification or New Permit Process

Before beginning construction, ensure that all work proposed around in, or around environmental features is identified in the water quality permits and corresponds with existing construction plans. If any information doesn't match the plans or a permit is not provided, contact the Regional ETO before construction begins around the environmental features.

When a construction change is required in or around an environmental feature or a new feature is discovered, the following process shall be followed prior to the changes being constructed. **No changes shall be constructed, until Regional Operations receives a permit modification, permit or approval to proceed from either the Regional ETO or HQ Permit Section.**

The Project Development Division shall be consulted to determine if the alteration will significantly change the hydraulics of the structure or require additional Right of Way (ROW). Environmental Boundaries Data Sheets, photos, etc. should accompany this request.

A. The Operations District Engineer (or designee) shall be the single point of contact for Operations during the permit modification or permit request process. The Operations District Engineer (or designee) must coordinate any request with the Regional ETO at the following email addresses:

1. R1.EnvTechOffice@tn.gov
2. R2.EnvTechOffice@tn.gov
3. R3.EnvTechOffice@tn.gov
4. R4.EnvTechOffice@tn.gov

B. The Operations District Engineer (or designee) will submit the following information to the Regional ETO:

1. Subject line of email
   - **a.** Contract Number
   - **b.** PIN
   - **c.** Route and Termini
   - **d.** County

2. Body of Email:
   - **a.** Description of the requested modification
   - **b.** Reason modification is required
   - **c.** Alternatives considered when determining modification
   - **d.** Impacted environmental feature(s) name and stream number
   - **e.** For a new environmental feature(s), provide approximate station and offset information.
   - **f.** Does modification impact on-site mitigation
   - **g.** Modification construction schedule
3. Attachments
   - **a.** Drawings, sketches, or marked up plan sheets showing the proposed change or new environmental feature requiring a permit or permit modification.
   - **b.** Photos that aid in the justification of the proposed change

C. The Regional ETO will review the request to determine if the modification can be justified, if a permit modification is required, if additional information is needed or work can proceed. Once all required information needed for the permit or permit modification request is obtained, the request package will be sent to HQ Permits Section to develop the regulatory agency submittal. New permit(s) or permit modification(s) that require mitigation may take longer because mitigation credits are required prior to application. The response time from the regulatory agencies on ARAP and/or Section 404, and/or TVA Section 26a modification request can take between 45 to 120 days depending on the permit type and the need for mitigation.

D. While waiting for regulatory approval for the new permit or modified permit, work can continue in all areas except for those needing new or additional permit coverage. **The areas waiting for permit coverage should be protected and no construction or associated impacts should occur until receiving the permit(s). Measures must be implemented to prevent further degradation or damage to the environmental features while waiting for the permit issuance.** Contact the Regional ETO for any questions about allowable construction activities, permit status or protective measures.

E. The HQ Permits Section will distribute the new permits or permit modifications to the standard distribution list once all have been obtained. Prior to initiating work in the areas of new coverage, review the permit(s) to ensure compliance and compatibility with construction plans. Work shall begin or continue in these areas once permits or permit modifications have been received.

CIRCULAR LETTER

SECTION: **107.22**
NUMBER: **107.22-01**
SUBJECT: **AMERICANS WITH DISABILITIES ACT (ADA) COMPLIANCE ON RESURFACING AND OTHER MAINTENANCE TYPE PROJECTS**
DATE: **OCTOBER 2, 2015**

The Department of Transportation's goal is to provide an accessible transportation network to all users; this includes ensuring the safety of pedestrians and individuals with disabilities. Any project that includes the construction or alteration of a facility that provides access to pedestrians must be made accessible to persons with disabilities.

Projects with existing pedestrian facilities must provide an adequate traffic detour for pedestrian movement in compliance with the Americans with Disability Act.

Resurfacing is an alteration that triggers the requirement to add curb ramps if it involves work on a street or roadway spanning from one intersection to another, and includes overlays of additional material to the road surface, with or without milling.

It is not practical for the project designer on small projects, such as resurfacing, to survey and design each and every curb cut adjustment. In most cases, the construction project engineer will be able to utilize standard drawings and accommodate the accessibility requirements easily.

If a resurfacing project is extended where it will impact an intersection with pedestrian crossings, the crossings must comply with ADA requirements where technically feasible. Standard drawings should be utilized by field construction staff to adjust the intersection as required.

In some cases, our standard drawings may call for a larger sidewalk than currently exists, or it may be technically infeasible to meet the grade requirements stipulated. When adherence to the standard drawing is technically infeasible, field engineering solutions are appropriate. In these cases, the construction project engineer shall document via **both** before and after photos and a written explanation (and sketches if appropriate) of why it was technically infeasible to meet the requirement of the standard drawing and what was done to maximize access. The solution should be well thought out prior to its implementation.

If further assistance is required, the TDOT ADA Coordinator should be contacted for assistance.

CIRCULAR LETTER

SECTION: **108.01 SUBLETTING OF CONTRACT**
NUMBER: **108.01-01**
SUBJECT: **SUBLETTING OF CONTRACTS**
DATE: **MAY 17, 2024**

SECOND TIER CONTRACTS

When work to be performed under an approved subcontract is sublet by the subcontractor to a second (or more) tier subcontractor, a list of the work included in the second (or more) tier subcontract shall be submitted on the Department's Second Tier Subcontract Form to the Headquarters Construction Division for approval prior to performance of any work covered by the second-tier subcontract.

APPROVAL AND DISTRIBUTION OF SUBCONTRACTS

Effective immediately, approval and distribution of subcontracts will be handled as follows:

1. The Prime Contractor will be responsible for submitting subcontracts to the Headquarters Construction Division for review and approval.
2. Subcontractors will be responsible for submitting Tier Subcontracts to the Headquarters Construction Division for review and approval.
3. The Headquarters Construction Division will forward DBE Tier Subcontracts to the Civil Rights Division – Small Business Development Program for review.
4. The Headquarters Construction Division will email copies of approved subcontracts to the appropriate District Offices and the Civil Rights Division – Small Business Development Program.
5. District Office or designated representative will distribute one copy of the approved subcontract to the following:
    1. Team Lead
    2. Prime Contractor
    3. Subcontractor
    4. Audit Support Unit
        TDOR Audit Division
        6th Floor, Andrew Jackson Bldg.
        Nashville, TN 37242
        615-741-8499
        Auditsupport.requests@tn.gov
    5. Employment Security Division
        Employer Acct. – Large Audit
        220 French Landing Dr.3-B
        Nashville, TN 37243
        615-741-0930
        Mark.howell@tn.gov

SUBCONTRACTORS AND DISADVANTAGED BUSINESS ENTERPRISES (DBE)

As stated in sections 108.01 and 102.01 of the specifications, all work to be sublet must be approved, and must be performed by a subcontractor that is prequalified with the Department.

All required contractual work that is performed by a contractor other than the prime contractor will be considered a subcontractor (or tier subcontractor), and therefore must be prequalified, must submit sub-contract forms for approval, receive approval, and must submit certified payrolls (section 107.20). No subcontractor work shall begin work until the subcontract has been approved by TDOT and the contract is put into effect. Any work completed before approval and without other prior authority of TDOT will be considered unauthorized and may not be paid for as stated in 105.12 of the specifications.

The actual, legal subcontract between contractors shall physically include the following and it cannot be referenced:

- FHWA 1273
- DBE Assurance Statement

Any work involving "laborers and mechanics", as defined by the Federal and/or State classification of workers and prevailing wage rates, will be required to be a subcontractor to verify compliance with Davis-Bacon Act and State prevailing wage laws. Therefore, a subcontract will be required for flagging, drilling/blasting, sweeping, surveying, trucking/hauling (see below) and all other standard work items.

When labor is subcontracted or the contractor enters into an employee lease agreement, the procedures in Circular Letter 1273-05 or 1273-05.01 must be adhered to.

Hauling/Trucking firms must have a subcontract when they are working and hauling material "on the project site" as defined in Circular Letters 1273-04 and 1273-04.01. When hauling/trucking firms are not working "on the project site" and are hauling from a non-project specific or a commercial site, a sub-contract is not required. However, if a hauling/trucking firm is a DBE, then a subcontract and certified payrolls will be required for documentation purposes. (The prevailing wages under Davis-Bacon or TN Prevailing Wage Act are *not* required if the hauling/trucking firm is not working "on the project site" but the certified payroll will serve as proof the DBE hauling subcontractor was working on the project and the drivers are employees of the DBE)

Any DBE who is performing work, or providing materials, must enter into a subcontract so TDOT can accurately monitor both race conscious and race neutral DBE participation. However, if the DBE is a manufacturer or regular dealer/material supplier *ONLY* (as defined in SP 1247) they are not required to be pre-qualified. They must state on the Sub-contract form that they are a MANUFACTURER ONLY or MATERIAL SUPPLIER ONLY.

Reference:
From the Standard Specifications:

> **Subcontractor.** Any individual, firm, partnership, or corporation to whom the Contractor sublets any part of the ***Work*** under the Contract.
>
> **Work.** The Work shall mean the furnishing of all labor, materials, equipment, and any incidentals necessary to the satisfactory completion of the project, including the carrying out of all duties and obligations imposed by the Contract.

From the TDOT Rules Chapter1680-5-3 Prequalification of Contractors:

> "Subcontractor" means any individual person, partnership, limited liability company, corporation, or other business entity, acting directly or through a duly authorized representative, that has entered or may seek to enter into a contract with a contractor to perform some part of the work under a contract with the Department; provided, however, that this definition of subcontractor does not include any such person or business entity that only provides or delivers materials to a contractor or subcontractor performing work under a contract with the Department.

From FHWA 1273:
GENERAL

1. These contract provisions shall apply to all work performed on the contract by the contractor's own organization and with the assistance of workers under the contractor's immediate superintendence and to all work performed on the contract by piecework, station work, or by subcontract.
2. Except as otherwise provided for in each section, the contractor shall insert in each subcontract all of the stipulations contained in these Required Contract Provisions, and further require their inclusion in any lower tier subcontract or purchase order that may in turn be made. **The Required Contract Provisions shall not be incorporated by reference in any case**. The prime contractor shall be responsible for compliance by any subcontractor or lower tier subcontractor with these Required Contract Provisions.

From 49 CFR Part 26.13:

Each contract you sign with a contractor **(and each subcontract the prime contractor signs with a subcontractor)** must include the following assurance:

"The contractor, sub recipient or subcontractor shall not discriminate on the basis of race, color, national origin, or sex in the performance of this contract. The contractor shall carry out applicable requirements of 49 CFR part 26 in the award and administration of DOT-assisted contracts. Failure by the contractor to carry out these requirements is a material breach of this contract, which may result in the termination of this contract or such other remedy as the recipient deems appropriate."

CIRCULAR LETTER

SECTION: **108.02**
NUMBER: **108.02-01**
SUBJECT: **CONSULTANT INSPECTION NOTICE (WORK ORDERS)**
DATE: **OCTOBER 2, 2015**

Work Orders sent to the Contractors for Contracts that utilize Consultant Engineering and Inspection (CEI) shall include the following language:

> This project has been assigned to "Name of District Operations Supervisor", whose address is "Location", and he is being requested by copy of this letter to notify the proper officials of this Department as to the date on which work is actually begun and the date from which time will be charged on the Contract. "Name of Consultant" will be performing the Inspection services on this Contract in accordance with Subsection 105.10 and 105.11 of the Standard Specifications. "Name of Consultant" will be the duly authorized representative of the Department and will work under the direction of "Name of District Operations Supervisor". Conflicts or interpretation involving the inspection of the work or the Standard Specifications shall be resolved through "Name of District Operations Supervisor" or the Regional Operations Office.

CIRCULAR LETTER

SECTION: 108.03 PROSECUTION OF CONSTRUCTION
NUMBER: 108.03.B
SUBJECT: BAR CHART SCHEDULES
DATE: MARCH 1, 2024

All projects let on or after February 5, 2021 must follow the scheduling process outlined within this Circular Letter and the 2021 Standard Specifications.

Receiving and Storing Schedule Files

Once a schedule and related materials are received from the contractor, these files shall be stored under the respective contract folder on the CMS/File Management Drive (a.k.a. Unit Drive).

Within the contract's folder, create a folder titled "Bar Chart Schedules".

Save all schedule files and narratives in this folder.

Baseline Bar Chart Schedule

At the preconstruction meeting, the Contractor shall submit a draft baseline Bar Chart Schedule. This is to discuss the Contractor's plan to execute the work by the completion date set forth in the Proposal. This also allows discussion of potential conflicts that may affect the schedule and how they might be mitigated. The baseline Bar Chart Schedule shall include, in its entirety, the detailed activities representing the entire duration of the project.

The deliverables expected from the Contractor include the electronic copy and hard copy of:

Bar Chart Schedule

Narrative

When reviewing the baseline Bar Chart schedule, use the **Baseline Bar Chart Schedule Checklist form** to ensure a complete Baseline Bar Chart project schedule has been submitted to the Engineer in accordance with Section 108.03.B of the Specifications.

Narrative

The schedule narrative adds and supports understanding of the basis and assumptions in the schedule. The Narrative shall be prepared in accordance with Section 108.03.B of the Specifications and shall include the following:

Estimated quantities for controlling activities. The assumed estimated Work quantities that are anticipated to be needed.

Estimated production rates for controlling activities. The assumed estimated production rates that are anticipated to be used.

Workdays per week. The assumed number of workdays per week for all activities. The number of workdays per week may vary depending on the activity work types. The Contractor should clarify all assumptions. (Note: Some Contractors will assume 5 workdays per week, and then use additional days during the week if progress falls behind schedule.)

Holidays. All Holidays in which work is not planned or allowed.

Number of shifts per day. The assumed number of shifts per day, including any exceptions.

Number of hours per shift. The assumed number of hours per shift, including any exceptions.

Planned number and types of crews. The assumed number of crews and types, including any exceptions.

Equipment. Lists of Contractor's and Subcontractor's expected equipment. Standard machinery and equipment do not need to be listed individually. The Contractor should comment on any unique or special equipment that they plan to use.

A number of anticipated adverse weather days for each month. A monthly breakdown of the number of Nonwork days anticipated due to adverse weather conditions, by work type if applicable.

Bar Chart Schedule

Activities. The essential features of the Work.

Activities that may delay completion. The activities that might delay the completion or controlling Work on the project.

Planned start and completion dates for each activity. Start and Finish Dates should be listed for each activity.

Duration of each activity in workdays. The duration of each activity in workdays; and the calendar (number of workdays per week, holidays, number of shifts per day, and number of hours per shift) as described in the narrative. Schedules are required to be updated monthly. In order to determine whether progress is on schedule with each update, activities durations should be 20 workdays or less. Longer activities shall be broken up into two or more. Durations lasting more than 20 workdays, may be approved by the Team Lead.

Sequencing of activities. The sequencing of all activities including predecessors and successors.

Scheduling Software. If using scheduling software to create the bar chart schedule, have the contractor submit related reports for the predecessor and successor report, the sort by total float, and the sort by early start.

Dates related to Procurement. Procurement activities are unique in that they are not constrained by weekends, holidays, weather, or other non-workday restrictions. These activities will therefore utilize a standard 7-day work calendar. Similar activities include materials, equipment and articles of special manufacture.

Furthermore, procurement activities lasting more than 30 days cannot be subdivided into shorter activities. Such activities still impact the project's schedule, so it is necessary to include related activities in the schedule.

Activities related to Submittals. Administrative activities associated with the work shall be defined and included in the schedule. These include activities related to the submission of working drawings, plans, and other data specified for review or approval by the Department.

Dates related to Department inspections. The Department's activities associated with the work shall also be defined and included in the schedule.

Dates related to Specified activities. Any work performed by parties other than the contractor that can be defined as discrete work task and other time-based tasks necessary to complete the project shall be included.

Schedule Timeline. The timeline broken down into weekly time periods with a vertical line identifying the first working day of each week.

Schedule Updates

The Bar Chart schedule will be updated on a monthly basis to determine the current status of the project. As the schedule is updated, it is important to ensure that the schedule accurately reflects how the work is being performed.

If the contractor fails to provide monthly schedule updates and/or address the Engineer's comments regarding the monthly schedule update, within 10 calendar days following the progress estimate payment period cutoff date, the Engineer may withhold up to 10% of the monthly progress estimate payment, until such time as an acceptable update has been provided. Should this occur, contact TDOT Finance to add item 108-03.02, Bar Chart Schedule Updates, Funds Withheld, by the dollar; for the deduction on the monthly estimate. Any funds withheld from payment will be completely paid to the Contractor when the schedule is updated, or the pre-final estimate is being processed.

Use the **Bar Chart Schedule Update Checklist form** to analyze the current progress, ensure compliance with Section 108.03 of the Specifications, and determine potential needs for a schedule revision.

General

Actual Progress. It is important for schedule updates to provide the as-built status of the project.

Approved Change Orders. It is important to show schedule updates documenting approved change orders.

Updated critical or longest path. The critical path (shortest duration in which the project may be completed) may change if non-critical activities are delayed.

Completion Date. Ensure the schedule ends on or before the contract completion date.

Submission Requirements

The deliverables expected from the Contractor include the electronic copy and hard copy of:

Updated Bar Chart Schedule

Cover Letter

Updated Bar Chart Schedule

Actual start and finish for each activity. Start and Finish Dates should be listed for each activity.

Percentage Complete.

Original Duration. The original duration of activities started and ongoing.

Remaining Duration. The remaining duration of activities started and ongoing.

Schedule Changes. There should be a summary of schedule changes necessitated by changes to the Project as directed and any resulting from changes in the Contractor's planning or progress of the Work.

Cover Letter

Each monthly schedule update shall include a cover letter with the following information:

Schedule Revisions. The letter logically identifies and explains any schedule revisions since the prior monthly update.

Progress of Work. Includes a general description of the progress of the Work since the prior monthly update.

Special Interest. Identifies any items of special interest.

Progress Assessment

Upon receiving each schedule update, progress will need to be assessed to determine if actual construction has fallen behind the plan of operations or schedule by more than 15% or 60 calendar days. When this occurs, the Contractor shall offer for approval a revised schedule that reflects timely completion. Otherwise, the Team Lead may request a revised schedule.

A quick calculation of time versus money can be calculated using TIME COMPLETE (%) and WORK COMPLETE (%) from the most recent ESTIMATE in Site Manager. TIME COMPLETE (%) minus WORK COMPLETE (%) will result in the delay based on the straight-line method.

Circumstances that May Lead to Requesting a Revised Schedule

The Team Lead may request a revised schedule under the following circumstances:

> **15% or more behind schedule** - A delay (actual or projected) to a scheduled milestone or project completion date of 15% or more warrants requesting a revised schedule.
>
> **Difference in actual sequence or duration of work** - A difference between the actual sequence or duration of work and that depicted in the schedule warrants requesting a revised schedule. The revision is necessary to correct unrealistic activity durations or a significant number of activities that are being performed out-of-sequence.
>
> **Alteration by Change Order** - The issuance of a Change Order that alters the planned sequence of work or the method and manner of its performance by adding, deleting, or revising activities warrants requesting a revised schedule.

Schedule Revisions

A revision of the Bar Chart schedule is required when the schedule has been significantly impacted by a change in the Work or condition or the Contractor has deviated significantly from his baseline plan or schedule.

The Contractor may offer a revised schedule, or the Team Lead may request one. Circumstances that may lead to requesting a revised schedule are addressed in the **Bar Chart Schedule Update Checklist form** and in Section 108.03.D of the Specifications.

If the Contractor cannot justify unsatisfactory progress, administrative actions can be made in accordance with Section 108.03.D of the Specifications.

Communication with the Contractor

Upon review of the Bar Chart schedule and related materials, the Team Lead will either: Provide

review comments,

Request additional information,

Accept the Bar Chart schedule, or

Reject the Bar Chart schedule

Providing review comments

General review comments may be provided verbally, noted in meeting minutes, or in writing. No formal letter is required.

Template Letters

Template Letters are available on Construction Job Box.

LINKS TO FORMS:

Bar Chart Acceptance Letter
Bar Chart Request Additional Information Letter
Bar Chart Schedule Rejection Letter

Baseline Bar Chart Schedule Checklist
Bar Chart Schedule Update Checklist

CIRCULAR LETTER

SECTION: 108.03 PROSECUTION OF CONSTRUCTION
NUMBER: 108.03.C
SUBJECT: CRITICAL PATH METHOD (CPM)
SCHEDULES DATE: FEBRUARY 5, 2021

All projects with durations longer than 24 months or when required by contract must follow the scheduling process outlined within this Circular Letter and the meet requirements in 108.03.C. The **Initial Project Schedule (IPS)**, the **Baseline CPM Project Schedule**, and **Subsequent Updates** shall be generated using Primavera Project Management (P6) scheduling software.

Receiving and Storing Schedule Files

Once a schedule and related materials are received from the contractor, these files shall be stored under the respective contract folder on the CMS/File Management Drive (a.k.a. Unit Drive).

Within the contract's folder, create a folder titled "CPM Schedules".

CPM Submission Requirements

One hard copy in PDF or printed and one electronic copy in .xer format.

A Gantt Chart in PDF format to fit 11x17 inch paper. Gantt Charts to be included are;

Project Critical Path sorted by early start;

All uncompleted work activities as of data date sorted by area and early start;

60 day look ahead sorted by early start.

Narrative report in PDF file format to fit 8.5x11 inch paper.

Detailed approach to sequencing the work, including assumptions and restrictions considered in development and updates of the schedule;

Description of the Critical Path;

Description of the near-critical paths, defined as those activities not on the Critical Path with total float less than 20 days of total float;

Identification of potential conflicts that may affect the schedule and how they might be mitigated;

Identification of submittal approvals necessary for the work to proceed as shown;

Description of the calendars including identification of workdays per week, holidays, number of shifts per day, and number of hours per shift;

Description of how the schedule accommodates adverse weather days for each month;

Description of execution plan, including number and type of crews, a list of subcontractors' crews, and expected equipment, but not limited to large equipment transport and delivery, transportation permits for oversized/overweight loads, and availability.

Initial Project Schedule

Within thirty (30) calendar days after the Contract Award, the contractor shall submit an Initial Project Schedule (IPS). The IPS shall be submitted in accordance with the CPM schedule submission requirements and will be reviewed at the Pre-construction conference. A detailed plan shall be completed (as described in baseline CPM Schedule) for all work contemplated for the first one hundred and twenty (120) calendar days after the Work Order is issued, and include all other work thereafter in sufficient detail to identify the critical path and milestones.

Use the **Initial Project Schedule Checklist form** to ensure that a complete IPS has been submitted to the District Supervisor for review and acceptance.

Conducting the Baseline CPM Schedule Review Meeting

Within ninety (90) calendar days after the Effective Date, the Contractor shall arrange a meeting to review and submit a draft baseline CPM schedule. The purpose of the meeting is to discuss the Contractor's plan to execute the work by the completion date set forth in the Proposal. This meeting also allows discussion of potential conflicts that may affect the schedule and how they might be mitigated. The Baseline CPM shall include, in its entirety, the detailed activities representing the entire duration of the project.

During the initial project schedule meeting, use the **Initial Project Schedule Checklist form** to ensure a complete initial project CPM schedule has been submitted to the Engineer in accordance with Section 108.03 of the Specifications.

During the baseline CPM schedule meeting, use the **Baseline CPM Schedule Checklist form** to ensure a complete Baseline CPM project schedule has been submitted to the Engineer in accordance with Section 108.03 of the Specifications.

General

The schedule should begin on the same date as the Award Date (accepted date).

Baseline CPM Schedule

Working days. This refers to the use of Standard, Nonwork, and Exception calendar days in conjunction with duration dependent activities to calculate the schedule. (Note: Milestones will only contain one date.)

Planned start and completion dates for each activity. Start and Finish Dates should be listed for every activity on the Tabular Report submitted.

Alphanumeric coding structure and activity identification system.

Duration of each activity. Schedules are required to be updated monthly. In order to determine whether progress is on schedule with each update, activities durations should be 20 working days or less. Long lead activities lasting more than 20 working days, may be approved by the District Supervisor.

Finish-to-start relationships among activities, without leads or lags. Relationships, which form the logic of the project network, are used together with activity durations to determine schedule dates unless approved by the District Supervisor.

Constraints. Network logic alone cannot reflect all project situations. Sometimes activities must be accomplished according to specific dates rather than on dates determined by other activities in the project. In such cases, constraints (start, finish, mandatory, & late) may be applied. When in use, these should be noted in the narrative.

Critical Path. The sequence of activities that must be all be started and finished exactly on time in order to not delay the project. The critical activities can be identified in Primavera P6 using the Filter function.

Project Identification number. Shall remain the same for the entire duration of the project.

Activities related to Procurement. Procurement activities are unique in that they are not constrained by weekends, holidays, weather, or other non-workday restrictions. These activities will therefore utilize a standard 7-day work calendar. Similar activities include, but are not limited to fabrication of long lead materials, curing, load test, and settlement or surcharge periods.

Furthermore, procurement activities lasting more than 30 calendar days cannot be subdivided into shorter activities. Such activities still impact the project's schedule, so it is necessary to include related activities in the schedule.

Activities related to Submittals. Administrative activities associated with the work shall be defined and included in the schedule. These include activities related to the submission of working drawings, plans, and other data specified for review or approval by the District Supervisor.

Activities related to Department inspections and approvals. The Department's activities associated with the work shall also be defined and included in the schedule, such as inspections or approvals.

Specified activities performed by others. Any work performed by parties other than the contractor that can be defined as discrete work task and other time-based tasks necessary to complete the project shall be included.

Float is defined as the amount of time between the date when an activity can start (early start) and the date when an activity must start (late start). Float is a shared commodity between the Contractor and the Department, and either party has full use of the float until it is depleted.

CPM Schedule Shall NOT Include the following:

Float suppression techniques, such as preferential sequencing. Float suppression techniques include arranging critical path through activities more susceptible to a Department-caused delay. (Note: this is more applicable to A+B contracts)

Special lead/lag logic restraints. The use of leads or lags must be pre-approved by the District Supervisor before using in the schedule.

Zero total or free float constraints. Zero total or free float constraints (also known as "as late as possible") are used to make the activity finish immediately prior to its successors. This constraint consumes float by setting the Early Dates to equal the Late Dates, and as a result is prohibited.

Constraint dates other than required by the Contract. Network logic alone cannot reflect all project situations. Sometimes activities must be accomplished according to specific dates rather than on dates determined by other activities in the project.

For example, a singular ROW tract will not be available at the beginning of the project, but a specified date which is included in the contract.

The CPM schedule shall not include any constraints other than required by the "Contract Documents".

Schedule Updates

The CPM schedule will be updated on a monthly basis to determine the current status of the project. As the schedule is updated, it is important to ensure that the schedule accurately reflects how the work is being performed.

> **IMPORTANT: TO VERIFY THAT THE SCHEDULE UPDATES ARE CORRECT, IT IS NECESSARY FOR FIELD STAFF TO COLLECT AS-BUILT INFORMATION THROUGH A VARIETY OF SOURCES. SOURCES INCLUDE, BUT ARE NOT LIMITED TO, DAILY WORK REPORTS (DWRS), MEETING MINUTES, AND PROGRESS PHOTOGRAPHS/VIDEOS. (NOTE: IT IS RECOMMENDED TO DOCUMENT THE ACTUAL FINISH DATES FOR COMPLETED ACTIVITIES IN THE DAILY WORK REPORTS (DWRS)).**

If the contractor fails to provide monthly schedule updates and/or address the Engineer's comments regarding the monthly schedule update, by the estimate payment date, the Engineer may withhold up to 10% of the monthly estimate payment, until such time as an acceptable update has been provided. Should this occur, contact TDOT Finance to add item 108-03.01, CPM Schedule Updates, Funds Withheld, by the dollar; for the deduction on the monthly estimate. Any funds withheld from payment will be completely paid to the Contractor when the schedule is updated, or the pre-final estimate is being processed.

Use the **CPM Schedule Update Checklist form** to analyze the current progress, ensure compliance with Section 108.03 of the Specifications, and determine potential needs for a schedule revision.

General

> **Activity Status**. It is important for schedule updates to provide the as-built status of the project. The Contractor is required to provide actual start and finish dates of each activity or remaining durations of activities started but not yet completed.
>
> **Out of Sequence Progress.** Any activities that have posted progress without predecessors being completed are not allowed with written approval of the District Supervisor.
>
> **Updated Critical Path**. The critical path (shortest duration in which the project may be completed) may change if non-critical activities are delayed more than the available float. A change in the critical path may extend the completion date of an interim milestone or the project. If a scheduled milestone or project completion date is delayed 15% or more behind schedule, the District Supervisor may request a revised schedule that reflects timely completion.

Submission Requirements

> **See CPM Submission Requirements**

Narrative Report

Each schedule update shall include a Narrative report, as outlined in CPM Submission Requirements, and including the following:

Sources of delay with a detailed history of the delay, corrective action, and schedule adjustments to correct the delay;

Work planned for the succeeding update period;

Pending change orders; and

Changes made to the CPM schedule. Changes include additions, deletions, or revisions to activities due to the issuance of a change order, changes to an activity duration, changes to relationships between activities, or changes to the planned sequence of Work or the method and manner of its performance including any schedule changes due to changes in the planning or progress of the Work.

Note: It is recommended to have the Contractor comment on the narrative report regarding progress of any on-going activities greater than 20 days in duration.

Progress Assessment

Upon receiving each schedule update, progress will need to be assessed to determine if actual construction has fallen behind the plan of operations or schedule by more than 15% or 60 calendar days. When this occurs, the Contractor shall offer for approval a revised schedule that reflects timely completion. Otherwise, the District Supervisor may request a revised schedule.

A quick calculation of time versus money can be calculated using TIME COMPLETE (%) and WORK COMPLETE (%) from the most recent ESTIMATE in Site Manager. TIME COMPLETE (%) minus WORK COMPLETE (%) will result in the delay based on the straight-line method.

Circumstances that May Lead to Requesting a Revised Schedule

The District Supervisor may request a revised schedule under the following circumstances:

15% or more behind schedule - A delay (actual or projected) to a scheduled milestone or project completion date of 15% or more warrants requesting a revised schedule.

Difference in actual sequence or duration of work - A difference between the actual sequence or duration of work and that depicted in the schedule warrants requesting a revised schedule. The revision is necessary to correct unrealistic activity durations or a significant number of activities that are being performed out-of-sequence.

Alteration by Change Order - The issuance of a Change Order that alters the planned sequence of work or the method and manner of its performance by adding, deleting, or revising activities warrants requesting a revised schedule.

Schedule Revisions

A revision of the baseline CPM schedule is required when the schedule has been significantly impacted by a change in the Work or condition or the Contractor has deviated significantly from his baseline plan or schedule.

The Contractor may offer a revised schedule, or the District Supervisor may request one. Circumstances that may lead to requesting a revised schedule are addressed in the **CPM Schedule Update Checklist form** and in Section 108.03(D) of the Specifications.

If the Contractor cannot justify unsatisfactory progress, administrative actions can be made in accordance with Section 108.03(D) of the Specifications.

Communication with the Contractor

Upon review of the CPM schedule and related materials, the District Supervisor will either:

Provide review comments,

Request additional information,

Accept the CPM schedule, or

Reject the CPM schedule

Providing review comments

General review comments may be provided verbally, noted in meeting minutes, or in writing. No formal letter is required.

Template Letters

Template Letters are available on the Construction Division's Website and Construction Job Box.

Time Impacts and Delays

If the Contractor has been delayed because of conditions beyond their control and they are without fault, then a time extension may be justified.

The Contractor shall notify the District Supervisor in accordance with Section 104.03 of the Specifications and submit a written request for a time extension. The written request shall include a Time Impact Analysis and supporting documentation showing the impact of the delay on the critical path.

In accordance with Section 108.07 of the Specifications, the District Supervisor may extend the contract time or completion date only if an excusable delay affects the critical path of the work as shown on the accepted progress schedule.

Time Impact Analysis (TIA)

Time Impact Analysis (TIA) is a 'forward-looking,' prospective schedule analysis technique that adds a modeled delay to an accepted CPM schedule to determine the possible impact of that delay to project completion.

The TIA provides a reasonable assessment of a delay when applied appropriately. The TIA must be calculated quickly, while the project is on-going, and is best when modeling the effects of a single change or delay event.

The TIA relies on the CPM calculations to show the differences between two schedules:

A schedule that does not include a delay, and

A schedule that does include an activity modeling the delay event.

The difference in project completion dates is considered to be the impact of the delay for time duration considerations.

There are two assumptions that make TIA possible. The first assumption is that the most recent schedule update, just before the delay, accurately displays the status of work activities on the project at the time of delay. Therefore, timely acceptance of schedule updates is critical to the TIA success. The second assumption is that actual delay will not change the remaining work plan. Essentially, the work both prior to and following the delay remain unchanged, or 'frozen'.

When TIA is appropriate and all assumptions are met, it is a simple and effective method for modeling the effects of a delay.

Steps of TIA

According to Section 108.07 of the Specifications, the Contractor is responsible for performing the TIA. These are the steps they are expected to perform:

Create activity/s to represent delay.

Insert into most recent update, but w/ zero duration.

Run network calculations. Dates should remain unchanged.

Input Approved durations into delay activity/s.

Recalculate CPM.

Determine total time impact, and then remove any delays already awarded.

TIA Deliverables

The support is very important when processing a time extension using TIA. At a minimum, the deliverables of a TIA should include:

A written request for a time extension.

Two schedules with supporting documents (narrative, tables, reports):

The most recent schedule update, just prior to the delay.

A schedule that includes an activity modeling the delay event.

Support: Primavera Power-Users

Within the Construction Division, there are Power- Users who have access to Primavera software, and advanced knowledge in CPM schedules. These Power-Users are available as a resource to provide assistance (such as running reports, or checking the TIA) as needed. To identify each Power-User and their contact information, please contact your Regional Business Development Unit.

Online Webinar recordings of Primavera P6 training are available. Go to the TDOT Learning Network and search "Primavera P6 Scheduling".

LINKS TO FORMS:

Initial Project Schedule Checklist
Baseline CPM Schedule Checklist
CPM Schedule Updates Checklist

CPM Schedule Acceptance Letter
CPM Schedule Rejection Letter
CPM Schedule Request Additional Information Letter

CIRCULAR LETTER

SECTION: 108.03 PROSECUTION OF CONSTRUCTION
NUMBER: 108.03.C
SUBJECT: CRITICAL PATH METHOD (CPM)
SCHEDULES DATE: OCTOBER 8, 2021

All projects with durations longer than 24 months or when required by contract must follow the scheduling process outlined within this Circular Letter and the meet requirements in 108.03.C. The **Initial Project Schedule (IPS)**, the **Baseline CPM Project Schedule**, and **Subsequent Updates** shall be generated using Primavera Project Management (P6) scheduling software.

Receiving and Storing Schedule Files

Once a schedule and related materials are received from the contractor, these files shall be stored under the respective contract folder on the CMS/File Management Drive (a.k.a. Unit Drive).

Within the contract's folder, create a folder titled "CPM Schedules".

CPM Submission Requirements

One hard copy in PDF or printed and one electronic copy in .xer format.

A Gantt Chart in PDF format to fit 11x17 inch paper. Gantt Charts to be included are;

Project Critical Path sorted by early start;

All uncompleted work activities as of data date sorted by area and early start;

60 day look ahead sorted by early start.

Narrative report in PDF file format to fit 8.5x11 inch paper.

Detailed approach to sequencing the work, including assumptions and restrictions considered in development and updates of the schedule;

Description of the Critical Path;

Description of the near-critical paths, defined as those activities not on the Critical Path with total float less than 20 days of total float;

Identification of potential conflicts that may affect the schedule and how they might be mitigated;

Identification of submittal approvals necessary for the work to proceed as shown;

The quantity and estimated daily production rate for controlling activities:

Description of the calendars including identification of workdays per week, holidays, number of shifts per day, and number of hours per shift;

Description of how the schedule accommodates adverse weather days for each month;

Description of execution plan, including number and type of crews, a list of subcontractors' crews, and expected equipment, but not limited to large equipment transport and delivery, transportation permits for oversized/overweight loads, and availability.

Initial Project Schedule

Within thirty (30) calendar days after the Contract Award, the contractor shall submit an Initial Project Schedule (IPS). The IPS shall be submitted in accordance with the CPM schedule submission requirements and will be reviewed at the Pre-construction conference. A detailed plan shall be completed (as described in baseline CPM Schedule) for all work contemplated for the first one hundred and twenty (120) calendar days after the Work Order is issued, and include all other work thereafter in sufficient detail to identify the critical path and milestones.

Use the **Initial Project Schedule Checklist form** to ensure that a complete IPS has been submitted to the District Supervisor for review and acceptance.

Conducting the Baseline CPM Schedule Review Meeting

Within ninety (90) calendar days after the Effective Date, the Contractor shall arrange a meeting to review and submit a draft baseline CPM schedule. The purpose of the meeting is to discuss the Contractor's plan to execute the work by the completion date set forth in the Proposal. This meeting also allows discussion of potential conflicts that may affect the schedule and how they might be mitigated. The Baseline CPM shall include, in its entirety, the detailed activities representing the entire duration of the project.

During the initial project schedule meeting, use the **Initial Project Schedule Checklist form** to ensure a complete initial project CPM schedule has been submitted to the Engineer in accordance with Section 108.03 of the Specifications.

During the baseline CPM schedule meeting, use the **Baseline CPM Schedule Checklist form** to ensure a complete Baseline CPM project schedule has been submitted to the Engineer in accordance with Section 108.03 of the Specifications.

General

The schedule should begin on the same date as the Award Date (accepted date).

Baseline CPM Schedule

Working days. This refers to the use of Standard, Nonwork, and Exception calendar days in conjunction with duration dependent activities to calculate the schedule. (Note: Milestones will only contain one date.)

Planned start and completion dates for each activity. Start and Finish Dates should be listed for every activity on the Tabular Report submitted.

Alphanumeric coding structure and activity identification system.

Duration of each activity. Schedules are required to be updated monthly. In order to determine whether progress is on schedule with each update, activities durations should be 20 working days or less. Long lead activities lasting more than 20 working days, may be approved by the District Supervisor.

Finish-to-start relationships among activities, without leads or lags. Relationships, which form the logic of the project network, are used together with activity durations to determine schedule dates unless approved by the District Supervisor.

Constraints. Network logic alone cannot reflect all project situations. Sometimes activities must be accomplished according to specific dates rather than on dates determined by other activities in the project. In such cases, constraints (start, finish, mandatory, & late) may be applied. When in use, these should be noted in the narrative.

Critical Path. The sequence of activities that must be all be started and finished exactly on time in order to not delay the project. The critical activities can be identified in Primavera P6 using the Filter function.

Project Identification number. Shall remain the same for the entire duration of the project.

Activities related to Procurement. Procurement activities are unique in that they are not constrained by weekends, holidays, weather, or other non-workday restrictions. These activities will therefore utilize a standard 7-day work calendar. Similar activities include, but are not limited to fabrication of long lead materials, curing, load test, and settlement or surcharge periods.

Furthermore, procurement activities lasting more than 30 calendar days cannot be subdivided into shorter activities. Such activities still impact the project's schedule, so it is necessary to include related activities in the schedule.

Activities related to Submittals. Administrative activities associated with the work shall be defined and included in the schedule. These include activities related to the submission of working drawings, plans, and other data specified for review or approval by the District Supervisor.

Activities related to Department inspections and approvals. The Department's activities associated with the work shall also be defined and included in the schedule, such as inspections or approvals.

Specified activities performed by others. Any work performed by parties other than the contractor that can be defined as discrete work task and other time-based tasks necessary to complete the project shall be included.

Float is defined as the amount of time between the date when an activity can start (early start) and the date when an activity must start (late start). Float is a shared commodity between the Contractor and the Department, and either party has full use of the float until it is depleted.

CPM Schedule Shall NOT Include the following:

Float suppression techniques, such as preferential sequencing. Float suppression techniques include arranging critical path through activities more susceptible to a Department-caused delay. (Note: this is more applicable to A+B contracts)

Special lead/lag logic restraints. The use of leads or lags must be pre-approved by the District Supervisor before using in the schedule.

Zero total or free float constraints. Zero total or free float constraints (also known as "as late as possible") are used to make the activity finish immediately prior to its successors. This constraint consumes float by setting the Early Dates to equal the Late Dates, and as a result is prohibited.

Constraint dates other than required by the Contract. Network logic alone cannot reflect all project situations. Sometimes activities must be accomplished according to specific dates rather than on dates determined by other activities in the project.

For example, a singular ROW tract will not be available at the beginning of the project, but a specified date which is included in the contract.

The CPM schedule shall not include any constraints other than required by the "Contract Documents".

Schedule Updates

The CPM schedule will be updated on a monthly basis to determine the current status of the project. As the schedule is updated, it is important to ensure that the schedule accurately reflects how the work is being performed.

> **IMPORTANT: TO VERIFY THAT THE SCHEDULE UPDATES ARE CORRECT, IT IS NECESSARY FOR FIELD STAFF TO COLLECT AS-BUILT INFORMATION THROUGH A VARIETY OF SOURCES. SOURCES INCLUDE, BUT ARE NOT LIMITED TO, DAILY WORK REPORTS (DWRS), MEETING MINUTES, AND PROGRESS PHOTOGRAPHS/VIDEOS. (NOTE: IT IS RECOMMENDED TO DOCUMENT THE ACTUAL FINISH DATES FOR COMPLETED ACTIVITIES IN THE DAILY WORK REPORTS (DWRS)).**

Use the **CPM Schedule Update Checklist form** to analyze the current progress, ensure compliance with Section 108.03 of the Specifications, and determine potential needs for a schedule revision.

General

Activity Status. It is important for schedule updates to provide the as-built status of the project. The Contractor is required to provide actual start and finish dates of each activity or remaining durations of activities started but not yet completed.

Out of Sequence Progress. Any activities that have posted progress without predecessors being completed are not allowed with written approval of the District Supervisor.

Updated Critical Path. The critical path (shortest duration in which the project may be completed) may change if non-critical activities are delayed more than the available float. A change in the critical path may extend the completion date of an interim milestone or the project. If a scheduled milestone or project completion date is delayed 15% or more behind schedule, the District Supervisor may request a revised schedule that reflects timely completion.

Submission Requirements

See CPM Submission Requirements

Narrative Report

Each schedule update shall include a Narrative report, as outlined in CPM Submission Requirements, and including the following:

Sources of delay with a detailed history of the delay, corrective action, and schedule adjustments to correct the delay;

Work planned for the succeeding update period;

Pending change orders; and

Changes made to the CPM schedule. Changes include additions, deletions, or revisions to activities due to the issuance of a change order, changes to an activity duration, changes to relationships between activities, or changes to the planned sequence of Work or the method and manner of its performance including any schedule changes due to changes in the planning or progress of the Work.

Note: It is recommended to have the Contractor comment on the narrative report regarding progress of any on-going activities greater than 20 days in duration.

Progress Assessment

Upon receiving each schedule update, progress will need to be assessed to determine if actual construction has fallen behind the plan of operations or schedule by more than 15% or 60 calendar days. When this occurs, the Contractor shall offer for approval a revised schedule that reflects timely completion. Otherwise, the District Supervisor may request a revised schedule.

A quick calculation of time versus money can be calculated using TIME COMPLETE (%) and WORK COMPLETE (%) from the most recent ESTIMATE in Site Manager. TIME COMPLETE (%) minus WORK COMPLETE (%) will result in the delay based on the straight-line method.

Circumstances that May Lead to Requesting a Revised Schedule

The District Supervisor may request a revised schedule under the following circumstances:

15% or more behind schedule - A delay (actual or projected) to a scheduled milestone or project completion date of 15% or more warrants requesting a revised schedule.

Difference in actual sequence or duration of work - A difference between the actual sequence or duration of work and that depicted in the schedule warrants requesting a revised schedule. The revision is necessary to correct unrealistic activity durations or a significant number of activities that are being performed out-of-sequence.

Alteration by Change Order - The issuance of a Change Order that alters the planned sequence of work or the method and manner of its performance by adding, deleting, or revising activities warrants requesting a revised schedule.

Schedule Revisions

A revision of the baseline CPM schedule is required when the schedule has been significantly impacted by a change in the Work or condition or the Contractor has deviated significantly from his baseline plan or schedule.

The Contractor may offer a revised schedule, or the District Supervisor may request one. Circumstances that may lead to requesting a revised schedule are addressed in the **CPM Schedule Update Checklist form** and in Section 108.03(D) of the Specifications.

If the Contractor cannot justify unsatisfactory progress, administrative actions can be made in accordance with Section 108.03(D) of the Specifications.

Communication with the Contractor

Upon review of the CPM schedule and related materials, the District Supervisor will either:

Provide review comments,

Request additional information,

Accept the CPM schedule, or

Reject the CPM schedule

Providing review comments

General review comments may be provided verbally, noted in meeting minutes, or in writing. No formal letter is required.

Template Letters

Template Letters are available on the Construction Division's Website and Construction Job Box.

Time Impacts and Delays

If the Contractor has been delayed because of conditions beyond their control and they are without fault, then a time extension may be justified.

The Contractor shall notify the District Supervisor in accordance with Section 104.03 of the Specifications and submit a written request for a time extension. The written request shall include a Time Impact Analysis and supporting documentation showing the impact of the delay on the critical path.

In accordance with Section 108.07 of the Specifications, the District Supervisor may extend the contract time or completion date only if an excusable delay affects the critical path of the work as shown on the accepted progress schedule.

Time Impact Analysis (TIA)

Time Impact Analysis (TIA) is a 'forward-looking,' prospective schedule analysis technique that adds a modeled delay to an accepted CPM schedule to determine the possible impact of that delay to project completion.

The TIA provides a reasonable assessment of a delay when applied appropriately. The TIA must be calculated quickly, while the project is on-going, and is best when modeling the effects of a single change or delay event.

The TIA relies on the CPM calculations to show the differences between two schedules:

A schedule that does not include a delay, and

A schedule that does include an activity modeling the delay event.

The difference in project completion dates is considered to be the impact of the delay for time duration considerations.

There are two assumptions that make TIA possible. The first assumption is that the most recent schedule update, just before the delay, accurately displays the status of work activities on the project at the time of delay. Therefore, timely acceptance of schedule updates is critical to the TIA success. The second assumption is that actual delay will not change the remaining work plan. Essentially, the work both prior to and following the delay remain unchanged, or 'frozen'.

When TIA is appropriate and all assumptions are met, it is a simple and effective method for modeling the effects of a delay.

Steps of TIA

According to Section 108.07 of the Specifications, the Contractor is responsible for performing the TIA. These are the steps they are expected to perform:

Create activity/s to represent delay.

Insert into most recent update, but w/ zero duration.

Run network calculations. Dates should remain unchanged.

Input Approved durations into delay activity/s.

Recalculate CPM.

Determine total time impact, and then remove any delays already awarded.

TIA Deliverables

The support is very important when processing a time extension using TIA. At a minimum, the deliverables of a TIA should include:

A written request for a time extension.

Two schedules with supporting documents (narrative, tables, reports):

The most recent schedule update, just prior to the delay.

A schedule that includes an activity modeling the delay event.

Support: Primavera Power-Users

Within the Construction Division, there are Power- Users who have access to Primavera software, and advanced knowledge in CPM schedules. These Power-Users are available as a resource to provide assistance (such as running reports, or checking the TIA) as needed. To identify each Power-User and their contact information, please contact your Regional Business Development Unit.

Online Webinar recordings of Primavera P6 training are available. Go to the TDOT Learning Network and search "Primavera P6 Scheduling".

Compensation

The Department will measure and pay for CPM Project Schedule in accordance with 108.11 and 108.12, respectively, which can be found in the 100 Supplemental Specifications (9-7-21).

Construction CPM Project Schedule will be measured as a percentage of the lump sum price bid for the completion of the work specified in 108.03C and partial payment will be made according to the schedule in Table 108.11-1.

LINKS TO FORMS:

Initial Project Schedule Checklist 10.8.21
Baseline CPM Schedule Checklist 10.8.21
CPM Schedule Updates Checklist 10.8.21

CPM Schedule Acceptance Letter
CPM Schedule Rejection Letter
CPM Schedule Request Additional Information Letter

CIRCULAR LETTER

SECTION: **108.07 DETERMINATION OF TIME FOR COMPLETION**
NUMBER: **108.07-01**
SUBJECT: **DETERMINATION OF TIME BASED ON QUANTITY INCREASES**
DATE: **MARCH 1, 2024**

If the Project does not require a CPM schedule, and satisfactory fulfillment of the Contract requires a change to the Work in accordance with **104.02**, which may require a time extension, evaluate the Contractor's request, and determine whether the change has affected the completion of the Project. If the change resulted in an increase in quantities for a major item of work, as defined in **101.03**,and impacted controlling activities of the schedule, the Engineer may proportionally increase the Contract time allowed for performance of the major item of work.

The determination of contract completion dates assumes the controlling activities and normal production rates dependent on the type and size of contract. It also assumes that many items of work are completed concurrently with the controlling activities. When reviewing the increase to major items, existing change orders for major items that have statements that no additional time will be granted or statements that have time granted shall not be considered.

If it is determined that the increase in quantities for major items affected the controlling activities of the project, thus affecting project completion, then additional time allowance shall be made as follows:

AT = (MI / OCA) * OCT

Where AT = Additional contract time (days)
MI = sum of the additional cost of the major items ($)
OCA = Original contract amount ($)
OCT = Original contract time (days)

Example:
Original contract amount (OCA) = $1,000,000.00
Original contract time (OCT) = 150 days
Sum of additional cost (MI) = $150,000.00

AT = ($150,000.00/$1,000,000.00)*150 days = 22.5, say 23 days

form: Determination Of Time Based On Quantity Increases

To complete the additional contract time process, complete the form, the Team Lead and District Manager must sign form, and then create a zero dollar Change Order in SiteManager. The Change Order will be a zero dollar and always stay in draft status. Include the completed and signed form in SiteManager as supporting documentation for the Change Order.

Submit the completed Determination Of Time Based On Quantity Increases form by email to the Finance Division to notify them of the Change Order. Finance will review and adjust the completion date for the additional contract time in SiteManager.

CIRCULAR LETTER

SECTION: 109.01 MEASUREMENT OF QUANTITIES
NUMBER: 109.01-01
SUBJECT: ELECTRONIC TICKET DELIVERY SYSTEM
DATE: April 22, 2022

Description

TDOT will be using Special Provisions 109ETAS Regarding Electronic Ticket Delivery System for Asphalt (e-ticketing) and/or Special Provision 109ETC Regarding Electronic Ticket Delivery System for Concrete (e-ticketing) on certain projects. The special provisions require that the Contractor use an e-ticketing system for asphalt and/or concrete mixtures delivered to the project site.

Requirements

A. Special Provision 109ETAS

It is the responsibility of the TDOT Field Office and Inspectors to ensure that the requirements listed in the Special Provision 109ETAS are met. The Contractor will provide electronic Certified Public Weigher e-tickets for each load of asphalt mixture that is delivered to the project. The e-tickets are required to be automatically generated using a combined software and hardware fleet management system or an e-ticketing delivery system. The e-ticketing system will be required to fully integrate with the load read out scale system used to weigh the mixture being delivered. The Special Provision requires that the e-ticketing system will be capable of maintaining the data offline due to loss of power or connectivity.

The Special Provision requires the Contractor to provide real time continuous ticketing system access to the Department for the duration of the project using a web-based application. The e-ticketing delivery system that the Contractor plans to use shall be presented to TDOT and agreed upon before initial use on the project. TDOT will be granted access before any asphalt is delivered to the project. It will be the Contractor's responsibility to provide on-site technical assistance as needed during the project to operate the system. **Do not allow delivery of any asphalt mixture to the project that will use the e-ticketing system before an agreement has been reached concerning which system is to be used and TDOT has access. HQ Construction and HQ Materials and Test may provide support.**

If the e-ticketing system malfunctions, the inspector should immediately notify the Contractor's foreman or superintendent. It is expected that the Contractor will immediately seek technical assistance from his e-ticketing service provider, notify the plant that there is an issue, and take proactive steps to resolve the issue. The Contractor may continue to deliver loads of asphalt to the project accompanied by paper tickets as outlined in Standard Specification **109.01.E** for the current shift. The Contractor may work one additional shift providing paper tickets and e-tickets for each load delivered to ensure that all issues are resolved. If the issue with the e-ticketing system is not resolved by the end of the additional shift, the Contractor will be instructed not to begin another work shift involving loads of asphalt until the issue(s) is resolved.

TDOT inspectors should record asphalt temperatures, per guidance in the SOP, in the Comments section of the e-tickets. Any loads that are rejected should be noted as such in the Comments section. Document the reason for rejecting the load. Check the daily summary of e-tickets for compliance with

legal truck weight limits and highlight any loads exceeding the legal limits. No payment will be issued for loads exceeding the legal truck weight limit.

B. Special Provision 109ETC

It is the responsibility of the TDOT Field Office and Inspectors to ensure that the requirements listed in the Special Provision 109ETC are met. The Contractor will provide electronic Certified Plant Technician e-tickets for each load of concrete mixture that is delivered to the project. The e-tickets are required to be automatically generated using a combined software and hardware fleet management system or an e-ticketing delivery system. The e-ticketing system will be required to fully integrate with the load read out scale system used to batch the mixture being delivered. The Special Provision requires that the e-ticketing system will be capable of maintaining the data offline due to loss of power or connectivity.

The Special Provision requires the Contractor to provide real time continuous ticketing system access to the Department for the duration of the project using a web-based application. The e-ticketing delivery system that the Contractor plans to use shall be presented to TDOT and agreed upon before initial use on the project. TDOT will be granted access before any concrete is delivered to the project. It will be the Contractor's responsibility to provide on-site technical assistance as needed during the project to operate the system. **Do not allow delivery of any concrete mixture to the project that will use the e-ticketing system before an agreement has been reached concerning which system is to be used and TDOT has access. HQ Construction and HQ Materials and Test may provide support.**

If the e-ticketing system malfunctions, the inspector should immediately notify the Contractor's foreman or superintendent. It is expected that the Contractor will immediately seek technical assistance from his e-ticketing service provider, notify the plant that there is an issue, and take proactive steps to resolve the issue. The Contractor may continue to deliver loads of concrete to the project accompanied by paper tickets as outlined in Standard Specification **604.03** for the current shift. The Contractor may work one additional shift providing paper tickets and e-tickets for each load delivered to ensure that all issues are resolved. If the issue with the e-ticketing system is not resolved by the end of the additional shift, the Contractor will be instructed not to begin another work shift involving loads of concrete until the issue(s) is resolved.

TDOT inspectors should verify ticket information, per guidance in the Standard Specifications, circular letters and SOP. Any loads that are rejected should be noted as such in the Comments section. Document the reason for rejecting the load.

CIRCULAR LETTER

SECTION: **109.01 MEASUREMENT OF QUANTITIES**
NUMBER: **109.01-02**
SUBJECT: **TRUCK WEIGHT LIMITS**
DATE: **MARCH 28, 2023**

The Department now will require that all weight tickets conform to the new limits outlined on these sheets as required by law.

Interstate weight limits shall apply when hauling on any of the following:

a) Ramps entering or exiting the interstate system.
b) Any portion of an existing interstate open or previously opened to traffic.
c) The surface course of a new interstate facility (never opened to public traffic). However, Non-Interstate Highway limits will apply to hauling on the subgrade or base courses of newly constructed interstate widening projects if accessed by non-interstate routes.
d) New and existing structures on interstates.

In consideration of the status of construction, relative to the present federal interstate system, it is considered that the above determinations provide adequate guidance as to the applicability of interstate truck weights.

Loads in excess of the Legal Weight Limit (LWL) shall be rejected and no payment will be issued with the exception for asphalt millings hauled from the roadway cold planing operation, where a scale is not available, to the off-load site.

Cold Planing - Asphalt Millings

The following guidelines are established regarding payment for a truck load of asphalt millings where the total weight exceeds the allowable Legal Weight Limit. These guidelines only apply to pay item ”415-01.01 COLD PLANING BITUMINOUS PAVEMENT, TON”.

For a truck load with more than 2000 LBS (1 ton) over the allowable LWL, the entire load will NOT be paid for.

Payment for each truck load that is 2000 pounds or less over the LWL will be as follows:

1. The portion of the truck load that is less than or equal to the LWL will be paid at the Contract bid price by the Ton.
2. The portion of the truck load that is over the LWL but 2000 pounds or less, will not be paid for and will be deducted a sum of $0.10 (10 cents) per pound, not as a penalty but as liquidated damages, for each pound over the LWL.
3. The deduction will be assessed using Item 415-01.90, Overweight Cold Planing Damage, Dollar.

To receive payment for truck loads over the LWL, the Contractor shall provide TDOT a list of all truck loads that are over the LWL with the following information: the legal/allowable maximum gross weight (LWL), actual gross weight, actual tare weight, actual net weight, the amount overweight, and the amount of deduction and liquidated damages. The list shall be submitted at the end of each work week that Work was performed.

EXAMPLE 1:
Assume:
Maximum allowable weight per Bridge Weight Formula= 58,000 LBS (29.00 tons)
Tare weight= 28,000 LBS (14.00 Tons)
Allowable Net weight= 30,000 LBS (15.0 tons)
Actual Gross weight= 59,300 LBS (29.65 Tons)
Actual Net weight= 31,300 LBS (15.65 tons)
Bid price for 415-01.01 COLD PLANING BITUMINOUS PAVEMENT= $30.00/Ton

Truck is overweight by 1,300 LBS (0.65 tons), but less than 2000 LBS, therefore payment will be for 15 tons of Millings ($450) and a liquidated damage of $130 (1300 LBS x $0.10) will be assessed.

EXAMPLE 2:
Assume:
Maximum allowable weight per Bridge Weight Formula= 58,000 LBS (29.00 tons)
Tare weight= 28,000 LBS (14.00 Tons)
Allowable Net weight= 30,000 LBS (15.0 tons)
Actual Gross weight= 60,760 LBS (30.38 Tons)
Actual Net weight= 32,760 LBS (16.38 tons)
Bid price for 415-01.01 COLD PLANING BITUMINOUS PAVEMENT= $30.00/Ton

Truck is overweight by 2,760 LBS (1.38 tons), therefore no payment will be made for the truckload.

SECTION I: Non-Interstate Highway

1) Two axle truck (one front, one rear)
   20,000# each axle
   Maximum gross weight = 40,000# *

2) Three axle straight (one front, tandem rear)
   Front axle = 20,000#
   Tandem axle = 34,000#
   Maximum gross weight = 54,000# *

   Exception: Class 9 tag or zone tag
   Maximum gross weight = 66,000# *

3) Four axle straight (one front, three rear)
   Front axle = 20,000#
   Single axle rear = 20,000#
   Tandem axle = 34,000#
   Maximum gross weight = 74,000# *

4) Three axle truck tractor and trailer (one axle front of tractor, one rear of tractor, one rear of trailer)
   Front axle = 20,000#
   Rear axle Tractor = 20,000#
   Rear axle Trailer = 20,000#
   Maximum gross weight = 60,000# *

5) Four axle truck tractor and trailer (one front of tractor, one rear of tractor, tandem rear of trailer)
   Front axle Tractor = 20,000#
   Rear axle Tractor = 20,000#
   Tandem axle Trailer = 34,000#
   Maximum gross weight = 74,000# *

6) Four axle truck tractor and trailer (one front of tractor, tandem rear of tractor, one rear of trailer)
   Front axle Tractor = 20,000#
   Tandem rear Tractor = 34,000#
   Single axle Trailer = 20,000#
   Maximum gross weight = 74,000# *

7) Five axle tractor and trailer (one front of tractor, tandem rear of tractor, tandem rear of trailer)
   Maximum gross weight = 80,000# *

   ***** Loads in excess of the Legal Weight limit shall be rejected and no payment will be issued.

SECTION II: Interstate Highway

Per Section 107.02 of the Standard Specifications, all trucks delivering material (rock, asphalt, concrete, etc.) to construction projects shall display the allowable gross weight for the Interstate System on the side of the truck. The Bridge Formula shall be used to determine Interstate System gross weights as defined below and in the attached Bridge Formula Weights brochure:

Weight Distribution Formula (Bridge Formula)

$$W = 500\ ((L\ N)/(N-1) + 12N + 36)$$

W = overall gross weight
N = number of axles under consideration
L = distance in feet between extremes of axles under consideration

Updated copy of Bridge Formula Weights brochure is attached.

Note

The Federal Highway Administration (FHWA) revises its guidance pamphlet Federal Bridge Formula Weights (May 2015). Previous editions of this guidance pamphlet are superseded and no longer valid. This guidance paraphrases provisions of 23 U.S.C. § 127 and 23 C.F.R. § 658 for purposes of illustration only. In the event of a dispute, the statute and regulation take precedence with respect to maximum allowable Federal Bridge Formula weights.

U.S. Department of Transportation
Federal Highway Administration

Office of Freight Management and Operations
Phone: 202-366-0408
Web site: https://ops.fhwa.dot.gov/freight

August 2019

FHWA-HOP-19-028

Bridge Formula Weights

August 2019

U.S. Department of Transportation
Federal Highway Administration

Bridge Formula Weights

With a few exceptions noted in this pamphlet, the Bridge Formula establishes the maximum weight any set of axles on a motor vehicle may carry on the Interstate highway system. This pamphlet describes the Bridge Formula, why it was established, and how it is used.

What Is It?

Congress enacted the Bridge Formula in 1975 to limit the weight-to-length ratio of a vehicle crossing a bridge. This is accomplished either by spreading weight over additional axles or by increasing the distance between axles.

Compliance with Bridge Formula weight limits is determined by using the following formula:

$$W = 500 \left[\frac{LN}{N-1} + 12N + 36 \right]$$

W = the overall gross weight on any group of two or more consecutive axles to the nearest 500 pounds.

L = the distance in feet between the outer axles of any group of two or more consecutive axles.

N = the number of axles in the group under consideration.

In addition to Bridge Formula weight limits, Federal law states that single axles are limited to 20,000 pounds, and axles spaced more than 40 inches and not more than 96 inches apart (tandem axles) are limited to 34,000 pounds. Gross vehicle weight is limited to 80,000 pounds (23 U.S.C. 127).

Is the Formula Necessary?

Bridges on the Interstate System highways are designed to support a wide variety of vehicles and their expected loads. As trucks grew heavier in the 1950s and 1960s, something had to

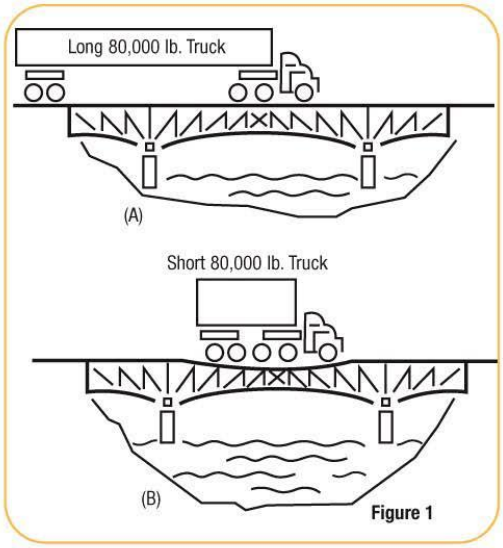

Figure 1

be done to protect bridges. The solution was to link allowable weights to the number and spacing of axles.

Axle spacing is as important as axle weight in designing bridges. In Figure 1A, the stress on bridge members as a longer truck rolls across is much less than that caused by a short vehicle as shown in Figure 1B, even though both trucks have the same total weight and individual axle weights. The weight of the longer vehicle is spread out, while the weight of the shorter vehicle is concentrated on a smaller area.

How Is the Formula Used?

The weight on various axle configurations must be checked to determine compliance with the Bridge Formula. Three definitions are needed to use the Bridge Formula correctly.

Gross Weight—the weight of a vehicle or vehicle combination and any load thereon. The Federal gross weight limit on the Interstate System is 80,000 pounds unless the Bridge Formula dictates a lower weight limit.

Single-Axle Weight—The total weight on one or more axles whose centers are spaced not more 40 inches apart. The Federal single-axle weight limit on the Interstate System is 20,000 pounds.

Tandem-Axle Weight—The total weight on two or more consecutive axles whose centers are spaced more than 40 inches apart but not more than 96 inches apart. The Federal tandem-axle weight limit on the Interstate System is 34,000 pounds.

Interstate System weight limits in some States may be higher than the figures noted above due to "grandfather" rights. When the Interstate System axle and gross weight limits were first adopted in 1956, and amended in 1975, States were allowed to keep or "grandfather" weight limits that were higher.

Bridge Formula calculations yield a series of weights (Bridge Table, pages 5-6). It is important to note that the single-axle weight limit replaces the Bridge Formula weight limit on axles not more than 40 inches apart, and the tandem-axle weight limit replaces the Bridge Formula weight limit for axles over 40 but not more than 96 inches apart. At 97 inches apart, for example, two axles may carry 38,000 pounds (Figure 2A), and three axles may carry 42,000 pounds, as shown in Figure 2B.

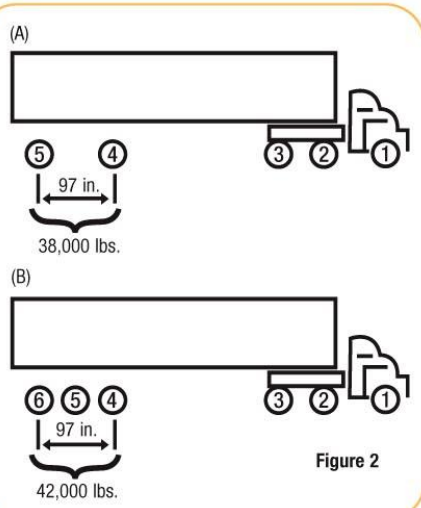

Figure 2

Federal law states that any two or more consecutive axles may not exceed the weight computed by the Bridge Formula even though single axles, tandem axles, and gross weight are within legal limits. As a result, the axle group that includes the entire truck—sometimes called the "outer bridge" group—must comply with the Bridge Formula. However, interior combinations of axles, such as the "tractor bridge" (axles 1, 2, and 3) and "trailer bridge" (axles 2, 3, 4, and 5), must also comply with weights computed by the Bridge Formula (Figure 3).

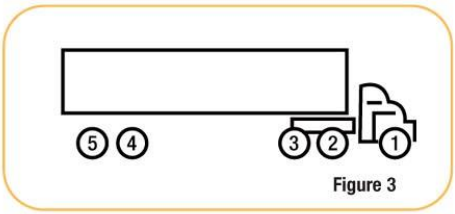

Figure 3

Figure 3 shows the most common vehicle checked for compliance with weight limit requirements. Although the Bridge Formula applies to each combination of two or more axles, experience shows that axle combinations 1 through 3, 1 through 5, and 2 through 5 are critical and must be checked. If these combinations are found to be satisfactory, then all of the others on this type of vehicle normally will be satisfactory.

The vehicle with weights and axle dimensions shown in Figure 4 is used to illustrate a Bridge Formula check.

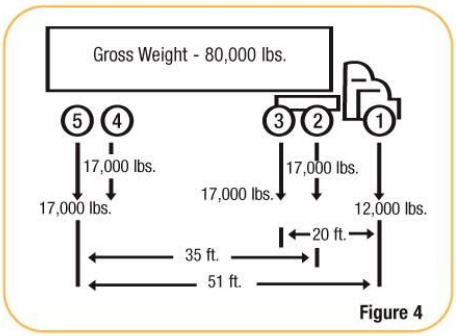

Figure 4

Permissible Gross Loads for Vehicles in Regular Operation[1]

Based on weight formula $W = 500\left[\frac{LN}{N-1} + 12N + 36\right]$

Distance in feet (L) between the extremes of any group of 2 or more consecutive axles

Maximum load in pounds carried on any group of 2 or more consecutive axles[2]

	L	N= 2 AXLES	3 AXLES	4 AXLES	5 AXLES	6 AXLES	7 AXLES	8 AXLES	9 AXLES
Tandem Axle Weight (see pages 3 & 4)	4	34,000	...	...	...	...	...	...	...
	5	34,000	...	...	...	...	...	...	...
	6	34,000	...	...	...	...	...	...	...
	7	34,000	...	...	...	...	...	...	...
	8	34,000	34,000	...	...	...	...	...	...
	More than 8/less than 9	38,000	42,000	...	...	...	...	...	...
	9	39,000	42,500	...	...	...	...	...	...
	10	40,000	43,500	...	...	...	...	...	...
	11	...	44,000	...	...	...	...	...	...
	12	...	45,000	50,000	...	...	...	...	...
	13	...	45,500	50,500	...	...	...	...	...
	14	...	46,500	51,500	...	...	...	...	...
	15	...	47,000	52,000	...	...	...	...	...
	16	...	48,000*	52,500	58,000	...	...	...	...
	17	...	48,500	53,500	58,500	...	...	...	...
	18	...	49,500	54,000	59,000	...	...	...	...
	19 Example	...	50,000	54,500	60,000	...	...	...	...
	20 (see page 7)	...	51,000	55,500	60,500	66,000	...	...	...
	21	...	51,500	56,000	61,000	66,500	...	...	...
	22	...	52,500	56,500	61,500	67,000	...	...	...
	23	...	53,000	57,500	62,500	68,000	...	...	...
	24	...	54,000	58,000	63,000	68,500	74,000	...	...
	25	...	54,500	58,500	63,500	69,000	74,500	...	...
	26	...	55,500	59,500	64,000	69,500	75,000	...	...
	27	...	56,000	60,000	65,000	70,000	75,500	...	...
	28	...	57,000	60,500	65,500	71,000	76,500	82,000	...
	29	...	57,500	61,500	66,000	71,500	77,000	82,500	...
	30	...	58,500	62,000	66,500	72,000	77,500	83,000	...
	31	...	59,000	62,500	67,500	72,500	78,000	83,500	...
	32	...	60,000	63,500	68,000	73,000	78,500	84,500	90,000
	33	...	...	64,000	68,500	74,000	79,000	85,000	90,500
	34	...	...	64,500	69,000	74,500	80,000	85,500	91,000
	35	...	...	65,500	70,000	75,000	80,500	86,000	91,500
	36	...	Exception (see page 9)	66,000	70,500	75,500	81,000	86,500	92,000
	37	...		66,500	71,000	76,000	81,500	87,000	93,000
	38	...	...	67,500	71,500	77,000	82,000	87,500	93,500
	39	...	...	68,000	72,000	77,500	82,500	88,500	94,000
	40	...	...	68,500	73,000	78,000	83,500	89,000	94,500
	41	...	...	69,500	73,500	78,500	84,000	89,500	95,000
	42	...	...	70,000	74,000	79,000	84,500	90,000	95,500
	43	...	...	70,500	75,000	80,000	85,000	90,500	96,000
	44	...	...	71,500	75,500	80,500	85,500	91,000	96,500
	45	...	...	72,000	76,000	81,000	86,000	91,500	97,500
	46	...	...	72,500	76,500	81,500	87,000	92,500	98,000
	47	...	...	73,500	77,500	82,000	87,500	93,000	98,500
	48	...	...	74,000	78,000	83,000	88,000	93,500	99,000
	49	...	...	74,500	78,500	83,500	88,500	94,000	99,500
	50	...	...	75,500	79,000	84,000	89,000	94,500	100,000
	51	...	...	76,000	80,000	84,500	89,500	95,000	100,500
	52	...	...	76,500	80,500	85,000	90,500	95,500	101,000
	53	...	...	77,500	81,000	86,000	91,000	96,500	101,500
	54	...	...	78,000	81,500	86,500	91,500	97,000	102,000
	55	...	...	78,500	82,500	87,000	92,000	97,500	102,500
	56	...	Interstate Gross Weight Limit (see page 2)	79,500	83,000	87,500	92,500	98,000	103,000
	57	...		80,000	83,500	88,000	93,000	98,500	104,000
	58	...	...	...	84,000	89,000	94,000	99,000	104,500
	59	...	...	...	85,000	89,500	94,500	99,500	105,000
	60	...	...	...	85,500	90,000	95,000	100,500	105,500

[1]The values in this table reflect FHWA's policy of rounding down when calculated weights fall exactly halfway between 500-pound increments. Because the Bridge Formula is designed to protect highway infrastructure, FHWA determined that this conservative policy is consistent with the statutory mandate.

Fn. 2 Pursuant to 23 CFR § 650.3 13, all bridges must be inspected, rated to safe load-carrying capacity, and if required, posted or restricted with respect to the maximum allowable weight.

Before checking for compliance with the Bridge Formula, a vehicle's single-axle, tandem-axle, and gross weight should be checked. Here the single axle (number 1) does not exceed 20,000 pounds, tandems 2-3 and 4-5 do not exceed 34,000 pounds each, and the gross weight does not exceed 80,000 pounds. Thus, these preliminary requirements are satisfied. The first Bridge Formula combination is checked as follows:

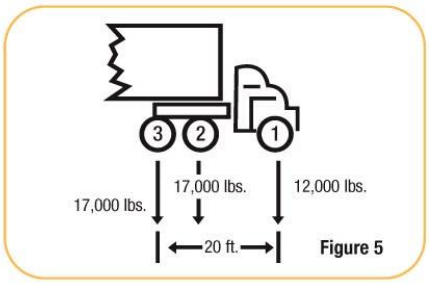

Figure 5

Check axles 1 through 3 (Figure 5)

Actual weight = 12,000 + 17,000 + 17,000 = 46,000 pounds.

N = 3 axles

L = 20 feet

$$W = 500 \left[\frac{LN}{N-1} + 12N + 36 \right]$$

$$W = 500 \left[\frac{(20 \times 3)}{(3 - 1)} + (12 \times 3) + 36 \right] = 51{,}000 \text{ lbs.}$$

Maximum weight (W) = 51,000 pounds, which is more than the actual weight of 46,000 pounds. Thus, the Bridge Formula requirement is satisfied.

Example From the Bridge Table (pages 5 & 6)
The same number (51,000 pounds) could have been obtained from the Bridge Table by reading down the left side to L = 20 and across to the right where N = 3.

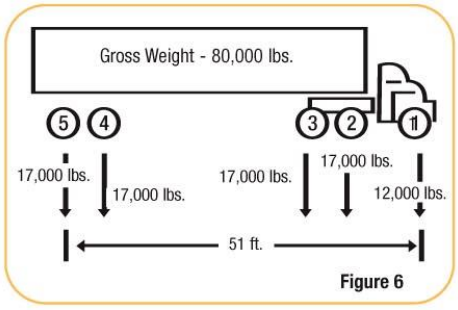

Figure 6

Now check axles 1 through 5 (Figure 6)

Actual weight = 12,000 + 17,000 + 17,000 + 17,000 + 17,000 = 80,000 pounds.

Maximum weight (W) = 80,000 pounds (Bridge Table for "L" of 51 feet and "N" of 5 axles).

Therefore, this axle spacing is satisfactory.

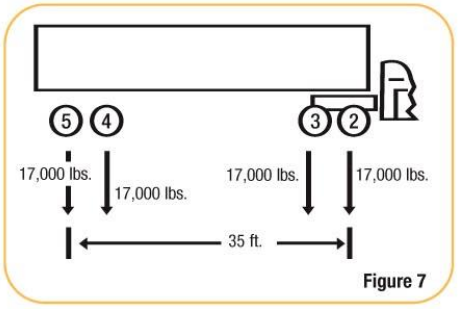

Figure 7

Now check axles 2 through 5 (Figure 7)

Actual weight = 17,000 + 17,000 + 17,000 + 17,000 = 68,000 pounds.

Maximum weight (W) = 65,500 pounds (Bridge Table for "L" of 35 feet and "N" of 4 axles).

This is a violation because the actual weight exceeds the weight allowed by the Bridge Formula. To correct the situation, some load must be removed from the vehicle or the axle spacing (35 feet) must be increased.

Exception to Formula and Bridge Table

In addition to the grandfather rights noted on page 3, Federal law (23 U.S.C. 127) includes one other exception to the Bridge Formula and the Bridge Table—two consecutive sets of tandem axles may carry 34,000 pounds each if the overall distance between the first and last axles of these tandems is 36 feet or more. For example, a five-axle tractor-semitrailer combination may carry 34,000 pounds both on the tractor tandem (axles 2 and 3) and the trailer tandem (axles 4 and 5), provided axles 2 and 5 are spaced at least 36 feet apart. Without this exception, the Bridge Formula would allow an actual weight of only 66,000 to 67,500 pounds on tandems spaced 36 to 38 feet apart.

Bridge Formula Application to Single-Unit Trucks

The procedure described above could be used to check any axle combinations, but several closely spaced axles usually produce the most critical situation.

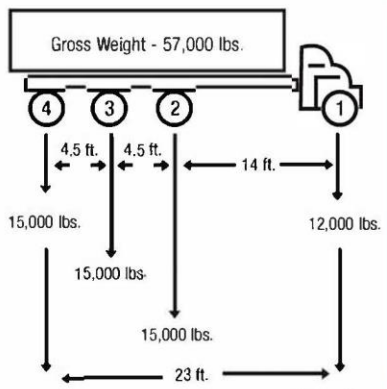

Figure 8

The truck shown in Figure 8 satisfies the single-axle weight limit (12,000 pounds are less than 20,000 pounds), the tandem-axle limit (30,000 pounds are less than 34,000 pounds) and the gross-weight limit (57,000 pounds are less than 80,000 pounds). With these restrictions satisfied, a check is done for Bridge Formula requirements, axles 1 through 4.

Actual Weight= 12,000 + 15,000 + 15,000 + 15,000 = 57,000 pounds.

Maximum weight (W) = 57,500 pounds (Bridge Table for "L" of 23 feet and "N" of 4 axles).

Since axles 1 through 4 are satisfactory, check axles 2 through 4:

Actual weight = 15,000 + 15,000 + 15,000 = 45,000 pounds.

Maximum weight (W) = 42,500 pounds (Bridge Table for "L" of 9 feet and "N" of 3 axles).

This is a violation because the actual weight exceeds the weight allowed by the Bridge Formula. The load must either be reduced, axles added, or spacing increased to comply with the Bridge Formula.

Quality Assurance Statement

The Federal Highway Administration (FHWA) provides high-quality information to serve Government, industry, and the public in a manner that promotes public understanding. Standards and policies are used to ensure and maximize the quality, objectivity, utility, and integrity of its information. The FHWA periodically reviews quality issues and adjusts its pro-grams and processes to ensure continuous quality improvement.

CIRCULAR LETTER

SECTION: **109.02 SCOPE OF PAYMENT**
NUMBER: **109.02-01**
SUBJECT: **SCOPE OF PAYMENT**
DATE: **SEPTEMBER 1, 2017**

PRICE ADJUSTMENTS

Upon receiving monthly indices for price adjustment items, the proper payment adjustment should be reflected on the next current estimate.

When any adjustments are made on estimates due to penalties, content or price variations, the contractor should be furnished a copy of the computations and explanation, therefore. All documentation should be uploaded into SiteManager.

TEST REPORTS

On all estimates, compare all pay quantities to the test reports or required certifications to assure that all items on the estimate are covered by the necessary in hand test reports or certifications.

Payment for stockpiled material may still be made as per Subsection **109.09** of the Standard Specifications.

Using this procedure should not delay the processing of estimates or change the cut off dates for the estimate period since materials used in the work are supposed to show evidence of having been inspected or tested prior to their being used. Thus, a Test Report or Certification should be readily available.

If the test report or certification is produced by the Department, payment for an item may be made based on a verbal approval from the Region. However, the respective Test Report or Certification shall be "in hand" on the subsequent estimate period or payment for the item shall be removed from the progress payment.

DOCUMENTATION OF QUANTITIES FOR PROGRESS PAYMENT

The Engineer will keep a book (electronic) in which the current quantities for each item in the contract is shown. Show the calculations for each item in this book or if copied from other records, reference back by book and page or sheet to the original notes.

CIRCULAR LETTER

SECTION: **109.02 SCOPE OF PAYMENT**
NUMBER: **109.02-05**
SUBJECT: **CERTIFICATION OF PROMPT PAYMENT AND DBE/SBE SUMMARY**
DATE: **MARCH 15, 2024**

The Standard Specifications, in accordance with TCA, Section 12-4-707, and 49 CFR 26.29 require the Prime Contractor to pay each subcontractor, material supplier, and hauler no later than 30 days from receipt of each payment the Prime Contractor receives from the Department. In addition, all subcontractors, at all tiers, must make payment no later than 30 days to each subcontractor, material supplier, and hauler for work and/or material provided for the project once they receive payment from the prime contractor or subcontractor.

In order to validate this payment, the Prime Contractor shall certify each month that payments have been made. The certification shall run no more than 2 months in arrears. If circumstances arise where payment to the subcontractors, material suppliers, or haulers has not been made, the Prime Contractor shall list reasons for nonpayment in the comments field. Also, the Prime Contractor shall be required to enter all subcontractors, material suppliers, or haulers where joint checks are utilized separately and note in the comments field that a joint check was issued.

When exceptions or joint check subcontractors are listed, the Team Lead shall notify the Director of Construction and the District Office.

The Subcontractor Prompt Payment Report shall be run at estimate time and then reviewed for accuracy and completeness. Estimate payments shall not be processed until the Prime Contractor has entered and approved all subcontractors, materials suppliers, and haulers that performed work during the specified time frame.

If any subcontractor, material supplier, or hauler disagrees with the information submitted by the Prime Contractor, the progress payment can be processed but the field office shall work with the Region and/or Headquarters Construction to resolve the disagreement/dispute as soon as possible. Final estimate payment shall not be made until a resolution is reached and corrective entries noted in the system.

CIRCULAR LETTER

SECTION: **109.02 SCOPE OF PAYMENT**
NUMBER: **109.02-05.01**
SUBJECT: **CERTIFICATION OF PROMPT PAYMENT AND DBE/SBE SUMMARY**
DATE: **NOVEMBER 2, 2018**

Projects let prior to August 2018 will follow guidance provided within this circular letter. Effective with the August 2018 letting, prompt payment requirements should follow guidance provided in Circular Letter 109.02-05.

The Standard Specifications, in accordance with **TCA, Section 12-4-707**, and 49 CFR 26.29 requires the Prime Contractor to pay each subcontractor and material supplier no later than 30 days from receipt of each payment the Prime Contractor receives from the Department. In addition, all subcontractors, at all tiers, must make payment no later than 30 days to each subcontractor and material supplier for work and/or material provided for the project once they receive payment from the prime contractor or subcontractor.

In order to validate this payment, the Prime Contractor shall certify each month that these payments have been made. The certification shall run no more than 2 months in arrears. If circumstances arise where payment to the subcontractors has not been made, the Prime Contractor shall list reasons for nonpayment and note whether or not the subcontractors are Disadvantaged Business Enterprises (DBE) or Small Business Enterprises (SBE)* in the exception block. Also, the Prime Contractor shall be required to list all subcontractors or material suppliers where joint checks are utilized and note whether or not the subcontractors or material suppliers are DBEs/SBEs in the joint checks box.

Once completed by the contractor, the Certification Regarding Prompt Payment to Subcontractors and Material Suppliers and DBE/SBE Payment Summary shall be submitted electronically in excel to both the Project Supervisor and the Small Business Development / DBE Office via: DBE.runningtally@tn.gov within one email submission. This form can be found on the Headquarters Construction Website. Copies of joint checks for DBEs/SBEs shall be attached to the email.

When exceptions or joint check subcontractors are listed, the Project Supervisor shall forward copies of the Certification to the Director of Construction and the Regional Construction office.

Monthly progress payments shall not be processed without this certification.

Use of the form Certification Regarding Prompt Payment to Subcontractors and Material Suppliers and DBE/SBE Payment Summary is required for contracts beginning with the September 14, 2012 Letting.

* Small Business Enterprise (SBE) as certified with the Governor's Office of Diversity Business Enterprise's Go-DBE System. All small businesses are encouraged to apply for certification with the Go-DBE System. More information is available at GoDBE.

Prompt Payment Form

CIRCULAR LETTER

SECTION: **109.03 COMPENSATION FOR ALTERED QUANTITIES**
NUMBER: **109.03-01**
SUBJECT: **OVERRUN AND UNDERRUN EXPLANATIONS**
DATE: **OCTOBER 2, 2015**

Explanations for overruns and underruns on revised estimates are to be provided in accordance with the following guidelines:

1. Explanations are to be given if an item is not used.

2. Explain items covered by a Supplemental Agreement by referring to the Supplemental Agreement, e.g., "See Supplemental Agreement No.--."

3. Explain items covered by a Plans Revision by referring to the Plans Revision, e.g., "See Plans Revision dated ------."

4. Explanations are to be given for overruns or underruns on major items (as defined in Subsection 101.03 of the Standard Specifications) if the quantity varies from the original quantity by 10% or more.

5. Explanations are to be given if the Engineer extends time due to overruns in accordance with Subsection 108.07 of the Standard Specifications.

6. Explanations are to be given for overruns and underruns due to other factors considered significant by the District Supervisor.

Explanations for changes not consistent with the above will be required if deemed significant by the Regional Operations Office, Headquarters Construction Office or Federal Highway Administration.

CIRCULAR LETTER

SECTION: **109.04 ADDITIONAL OR ALTERED WORK**
NUMBER: **109.04**
SUBJECT: **DOCUMENTATION AND METHOD OF PAYMENT**
DATE: **OCTOBER 2, 2015**

All price adjustments must be submitted in accordance with **Subsections 104.02 and 104.03**.

1. Change Order – This method is applicable when the Department and the Contractor can agree on equitable prices for the extra work. The procedures relating to major and minor changes in the Department's **Policy Number 355-01**, **Approval of Construction Change Orders and Force Account Work,** are to be followed for extra work covered by Change Order. The descriptions of the bid items, bid item numbers, and units of measure in the Change Orders should be obtained from the SiteManager Item Master. If an item of extra work is not covered in the SiteManager Item Master, the necessary bid item descriptive data shall be obtained from the Headquarters Construction Division.

2. Force Account – This method is applicable when the Department and the contractor are unable to agree on equitable prices for the extra work. The extra work must prove to be more cost effective than bidding the work. Prior approval for extra work performed by force account also is required in accordance with the procedures relating to major and minor changes in the Department's **Policy Number 355-01**, **Approval of Construction Change Orders and Force Account Work**. In all cases, detailed cost records must be kept by the Operations District Supervisor as prescribed in **Subsection 109.04** to fully support all billings for the work. The line item for the force account work on the Estimate Summary to Contractor should show the following information:

Bid Item Number:	109-04
Description:	Force Account
Unit of Measurement:	Dollar

CIRCULAR LETTER

SECTION: **109.05 ELIMINATED OR ALTERED ITEMS**
NUMBER: **109.05-01**
SUBJECT: **UNUSED OR SERVICEABLE MATERIAL REMOVED FROM THE PROJECT**
DATE: **MARCH 1, 2024**

1. Payment for Items which have been approved by the Team Lead for delivery to the project and not used, will be paid to the contractor in accordance with Subsection 109.05 of the Standard Specifications.

2. The Contractor should submit to the Field Office a letter detailing all the materials to be removed from the project. This letter should contain the information required in Subsection 109.05 of the Standard Specifications. After the Team Lead has received the letter, forward a copy to the District Manager. After this has been accomplished the responsibility for the removal and disposition of the material belongs to the District Manager.

CIRCULAR LETTER

SECTION: **109.08 PARTIAL PAYMENT**
NUMBER: **109.08-01**
SUBJECT: **PARTIAL PAYMENTS**
DATE: **MARCH 1, 2024**

Concrete Retaining Walls:
Where concrete retaining walls are paid for by the square foot (square meter) or lump sum, partial payment for work performed during the estimate period may be made provided that no stockpile payment has been made for materials incorporated into the work. The partial payment will be paid for under the actual pay item for the respective retaining wall.

For walls in both cut and fill sections, the Team Lead will estimate the percentage of the completed wall that is represented by:

1. Footing excavation and/or undercutting and select backfill, if required.
2. Concrete, reinforcing steel and piling in the footing(s).
3. Concrete and reinforcing steel, or precast panels and columns in the wall.
4. Drains and backfill.
5. Texture coat or other finish.

A partial payment quantity will be computed based on the percentages assigned above.

Method: Partial Payment Quantity = $\frac{\text{\% complete}}{100\%}$ x plans quantity

Where, % complete = sum of percentages assigned for the estimate period

Calculations as indicated above will be shown in the field book for each progress estimate that partial payments are made.

CIRCULAR LETTER

SECTION: **209-01**
NUMBER: **209.01-02**
SUBJECT: **EROSION PREVENTION AND SEDIMENT CONTROL (EPSC) INSPECTION REPORT**
DATE: **OCTOBER 2, 2015**

The inspection report and monthly rain gauge log identified in the Tennessee Department of Transportation Erosion Prevention Sediment Control (EPSC) Inspection Manual, the most current version is located on the TDOT Construction Division website and shall be utilized as the standard statewide report for the evaluation of EPSC measures on all Department projects that are subject to the requirements of the NPDES General Permit for Storm Water Discharges from Construction Activities (CGP). This report should also be used to document Contractor compliance with EPSC requirements in conformance with ARAP, Corps of Engineers, and/or TVA permits. The report shall be completed according to guidance provided by the Tennessee Department of Transportation EPSC Inspection Manual.

CIRCULAR LETTER

SECTION: **209-01**
NUMBER: **209.01-03**
SUBJECT: **CONSTRUCTION RELATED SEDIMENT REMOVAL**
DATE: **October 2, 2015**

This Circular Letter establishes the procedures for removal and/or stabilization of sediment discharges caused by active construction projects to non-jurisdictional areas (e.g., grassed or treed areas, wet weather conveyances, etc.), as well as jurisdictional areas (e.g., streams (including ephemeral streams), wetlands, sinkholes, etc.), within or beyond the project construction limits. Sediment caused by active construction projects must be removed and/or stabilized when it has accumulated beyond the last Erosion Prevention Sediment Control (EPSC) measure on the construction site before leaving the construction limits. Any sediment beyond the TDOT project right-of-way (ROW) is considered sediment discharge regardless of whether or not it is in a jurisdictional area. The District Operations Supervisor shall notify the Regional Environmental Coordinator (EC) immediately after it is discovered that a sediment release has occurred. The District Operations Supervisor or his/her designee shall complete all applicable information on the attached "Sediment Release Form". The District Operations Supervisor or his designee shall email the completed "Sediment Release Form" to the Regional EC, who will determine the appropriate course of action.

The Regions will only apply for activities included in the TDEC General Aquatic Resources Alteration Permit (ARAP) for Sediment Removal and Stream Remediation. This general permit authorizes certain stream remediation activities that serve the purpose of removing recently deposited sediment from stream beds, stream banks and riparian lands that result from construction related sediment releases from construction sites. These deposits shall be confined within areas that can be readily accessed and removed (stream restored or repaired) without additional harm to the shape or stability of the stream channel. Also, refer to standard specifications **Subsection 107.08 (Protection of Streams, Lakes and Reservoirs)** for additional information. The Nashville USACE District does not require notification of these activities since they do not regulate the removal of material from Waters of the U.S. The Memphis USACE District does not require notification prior to sediment removal activities. If TDOT sends a follow-up notification to TDEC after the sediment is removed, the Memphis USACE District would like to be copied on the notification letter. TVA does not need notification of these activities.

Attached are the Standard Operating Procedure (SOP), permit requirements, and sediment release form to use for this activity. The issuance of a permit does not authorize trespassing or discharges of storm water or non-stormwater across private property.

Work shall not commence in jurisdictional areas until TDOT has been notified by TDEC that the proposed activities may proceed under a general permit or that an individual permit has been issued. Email or verbal communication is an acceptable form of notification, if necessary.

Time is of the essence so that the extent of sediment migration is minimized and little or no delay is caused in construction progress.

Standard Operating Procedures (SOP) for Sediment Removal for Stream Remediation

Non-jurisdictional areas and waters:

Action to prevent the potential for additional discharges of sediment beyond the EPSC measures shall be started immediately. The removal and/or stabilization process for a sediment discharge in non-jurisdictional areas shall be started within twenty-four (24) hours after discovery. Since these accumulations of sediment have not yet reached a jurisdictional area, approval from the regulatory agencies is not necessary, but the terms and conditions of the TDEC General ARAP for the Alteration of Wet Weather Conveyances shall be followed. Removal of this sediment is the preferred method. The Regional Environmental Coordinator must approve the sediment cleanup activities if the contractor desires to stabilize and leave in place the sediment discharge. However, there cannot be a potential for the sediment to migrate into jurisdictional areas or for any other negative impact from leaving the sediment in place,

Attempts to remove and/or stabilize any off-site sediment discharges to non-jurisdictional areas outside of the ROW will require permission of the landowner. Arrangements concerning removal or stabilization of sediment on adjoining property must be settled by the contractorwith the adjoining landowner before removal or stabilization can occur. If permission is not allowed, the EPSC inspector shall document the effort to remove and/or stabilize the sediment discharge in the EPSC inspection report, and the District Operation Supervisor shall contact the Regional Director of Operations, TDOT HQ Construction Office, the Regional Environmental Coordiator and the Compliance and Field Servicesof this effort.

For sediment releases beyond the last measure and off ROW, the District Operations Supervisor or designee shall complete the TDOT Sediment Release Form attached to this circular.

Jurisdictional waters:

The Regional Environmental Coordinator shall call the TDEC Environmental Field Office to report the release and go through the plan to remove and stabilize or clean up the area. Once verbal or written approval from TDEC has been given, the sediment can be removed and the area stabilized, as agreed upon with TDEC. Immediately following the sediment release and removal, the District Operations Supervisor or Regional Environmental Coordinator shall complete the TDOT Sediment Release Form attached to this circular for all sediment releases to streams and/or wetlands.

Actions to prevent the potential for additional discharges of sediment beyond the EPSC measures and into the stream or wetland shall be taken immediately. The removal and/or stabilization process of a sediment discharge in jurisdictional areas shall be started as soon as approval is received from the appropriate regulatory agencies. The Regional Environmental Coordinator shall be notified immediately after it is discovered that sediment has discharged to a

jurisdictional area. Approval by the regulatory agencies will be required for removal of all construction related sediment discharges to jurisdictional waters.

For situations where the General ARAP is not authorized for coverage, the sediment removal and/or stabilization activity must be covered by an Individual ARAP.

General ARAP:
For sediment releases covered by the TDEC General ARAP for Sediment Removal and Stream Remediation, the Regional Environmental Coordinator shall receive approval to proceed before removing the sediment deposits as well as prepare and submit an application package to the appropriate regulatory agencies. The District Operations Supervisor (or designee) or Regional Environmental Coordinator must also complete the TDOT Sediment Release Form attached to this circular.

In the event sediment releases are covered under the TDEC General ARAP for Sediment Removal and Stream Remediation, the following steps shall occur.

1. The Regional Environmental Coordinator shall be the single point of contact for this activity and shall coordinate with all regulatory agencies and TDOT personnel.
2. The District Operations Supervisor (or their designee) shall notify the Regional Environmental Coordinator and the Regional Director of Operations of all sediment releases with the locations of sediment release identified on site sketches or plans, an explanation why the discharge occurred, a topographic map of location(s), a completed TDEC Form CN-1091 (located on TDEC's website), a summary of the impacts, and description of what will be done to prevent the further or continued loss of sediment from the site.
3. The Regional Environmental Coordinator shall notify the TDOT HQ Construction Office, the Regional Director of Operations, and the Compliance and Field Services with the information received from the District Operations Supervisor (or their designee) and the coordination efforts proposed with the regulatory agencies.
4. The Regional Environmental Coordinator shall contact the TDEC Environmental Field Office to report the release and discuss removal and remediation. Once TDEC has given verbal or written approval of the removal and remediation plan, sediment removal can begin. The Regional Environmental Coordinator shall complete the TDOT Sediment Release Form attached to this circular and include all necessary information. The package of information shall then be sent to TDEC with a copy to the Compliance and Field Services.
5. If necessary, the Regional Environmental Coordinator may request an on-site field visit with the appropriate regulatory agencies and the District Operations Supervisor (or their designee) to determine the appropriate course of action. If, after the on-site visit, TDEC requires a more detailed plan than proposed by the Regional Environmental Coordinator or requires an Individual Permit, the Regional Environmental Coordinator shall provide the sediment release and site visit information to the TDOT Natural Resources Office for further action. A more detailed plan is known as a Sediment Assessment and Remediation Plan

(SARP) which will be prepared, submitted to the regulatory agencies and overseen by the TDOT Natural Resources Office. In the case an Individual ARAP is required, instead of the Regions, the TDOT Natural Resources Office will be responsible for the next steps (#6 & #7 below). The TDOT Natural Resources Office shall provide this application package and regulatory approval to the Regional Environmental Coordinator in order to continue the next process step (#8).

6. The District Operations Supervisor (or their designee) shall submit to the Regional Environmental Coordinator the application package, including the materials required within this Circular Letter, for each sediment release off ROW or into a jurisdictional area. These include the following items: completed TDOT Sediment Release Form, completed TDEC CN-1091 form, and the items listed in the "Permit Information Required With General ARAP Application" section below.

7. The Regional Environmental Coordinator shall review the application package to ensure all required information necessary for the permit acquisition is accurate and complete. The Regional Environmental Coordinator shall submit the application package to the appropriate TDEC Environmental Field Office.

8. Once approval is received (either written or verbal with written follow-up) from TDEC, the Regional Environmental Coordinator shall distribute all applicable permits/approvals to the HQ Construction Office, the Compliance and Field Services and the District Operations Supervisor (or their designee).

9. The District Operations Supervisor (or their designee) shall oversee the sediment removal and/or stabilization activities of the contractor until complete. If a SARP is processed by the TDOT Natural Resources Office on this project, the TDOT Natural Resources Office and the Memphis USACE shall also be involved with the coordination of this activity.

10. The District Operations Supervisor (or their designee) shall notify the Regional Environmental Coordinator within two (2) calendar days after the sediment removal and /or stabilization is complete.

11. At this time, the Regional Environmental Coordinator shall visit the locations identified in the application and provide written and photographic documentation of the location where removal and/or stabilization was performed. This shall also be included in the EPSC inspection report.

12. Within seven (7) calendar days after the completion of each activity, the Regional Environmental Coordinator shall submit the documentation above, electronic color copy via email, to the regulatory agencies, TDOT HQ Construction Office and TDOT Compliance and Field Services. An electronic color copy (e.g. .pdf) shall be sent via email and one color copy shall be mailed to TDEC. Please be aware that TDEC may impose a fee (Natural Resource Damage Assessment) to cover the damages to the affected jurisdictional area if a significant amount of damage was done to the area and total recovery of the sediment was not achieved. This fee shall only be imposed following a SARP conducted by the TDOT Natural Resources Office, in conjunction with, or approved by, TDEC.

Individual ARAP:
If the sediment release to jurisdictional waters meets one of the exceptions to the General ARAP coverage listed above, the Regional EC shall provide sediment release information to the TDOT Natural Resources Office for the application for an Individual Permit. The District Operations Supervisor or designee will also complete the TDOT Sediment Release Form attached to this circular for submittal to the Regional Environmental Coordinator.

PERMIT INFORMATION REQUIRED WITHARAP APPLICATIONS

- **Cover Letter –** Description of the basic nature and scope of the project, including events that lead to the discharge, the characteristics of the discharge and the proposed method of sediment removal/stabilization. This application letter and any forms shall be signed by the Regional Construction Supervisor (or their designee).
- **7½-minute USGS Topographic Quadrangle Map –** Located in the appendix of the Storm Water Pollution Prevention Plan (SWPPP)* as the Vicinity Map or within the Water Quality Permit Application.
- **Permit Identification Numbers –** Located on the NPDES Notice of Coverage (NOC), the USACE, TDEC and TVA permits.
- **Latitude/Longitude – In**-stream location of sediment accumulation. This can be found on the internet (e.g., www.topozone.com), with a GPS unit or on the topographic quadrangle map. In the form of (Latitude XX.XXXX N, Longitude XX.XXXX W)
- **Receiving Stream –** Located within the text of the SWPPP* or in the Ecology information within the Appendix of the SWPPP* or within the Water Quality Permit Application.
- **Threatened or Endangered Species –** Located in the Ecology information within the appendix of the SWPPP* or within the Water Quality Permit Application.
- **Photos –** Before sediment removal work (to submit with the application) and, once the work has been completed, after sediment cleanup (to submit after completion of the activity) representative photos.
- **Plan sheets and/or sketches –**Use Erosion Prevention and Sediment Control (EPSC) Sheet from within the Appendix of the SWPPP* to show EPSC methods being maintained. Provide sketch showing the approximate dimensions of the sediment deposit, the proposed diversion methods and any additional EPSC measures needed for sediment removal, if appropriate.
- **Provide copies of the TDOT Standard Drawings, as appropriate**
- **Proposed Commencement Date –** Upon issuance of permit
- **Proposed Completion Date –** (e.g., 30 days) from issuance of permit. The permit will state the expiration date based upon the proposed completion date. If additional time is needed after the stated expiration date within the permit, the Regional EC shall contact the regulatory agencies at least one week before the expiration date with a request for time extension and the amount of time requested.
- **Identify if the stream is listed as one of the following waters** - This information is available on TDEC's website.
  National Wild and Scenic Rivers in TN
  Tennessee's Designated State Scenic Rivers
  Outstanding National Resource Waters

*A SWPPP will not be provided on all projects. A SWPPP is only provided on construction projects that disturb one (1) acre or more of land.

TENNESSEE DEPARTMENT OF TRANSPORTATION
EROSION PREVENTION/SEDIMENT CONTROL
SEDIMENT RELEASE FORM
FOR USE FOR SEDIMENT RELEASES OFF ROW AND/OR INTO STREAMS/WETLANDS

State Route (SR) / US Route or Road Name and Description:		
County(ies):	TDOT PIN:	NPDES Permit (NOC) #:
Other Applicable Permits (ARAP, TVA, etc.)		
TDOT Contract No.:	Contractor:	
Date of Sediment Release:	Did sediment leave the ROW or discharge into a stream or wetland? Yes/No If No, no further documentation beyond the EPSC inspection report is required.	
TDOT/Consultant EPSC Inspector:		
Form Completed By: (TDOT Project Supervisor/Designee)		Date
Received and Reviewed By: (Regional Environmental Coordinator)		Date

Forwarded to Local TDEC EFO (if applicable) _____(Initial and Date)

Forwarded back to Local TDOT Construction Office _____(Initial and Date)

Location of Sediment Release (Outfall and STA): *[Record the approximate stationing, which side of centerline and nearest Outfall (if release is not at an Outfall). Example: Sediment release to Clear Creek at Outfall 2, Sta. 1+250 LT]*

Cause of Sediment Release: *[Describe what caused sediment release. Include relative rainfall totals, installed BMPs in area and if they were installed per the site erosion control plan and SWPPP requirements, etc. Example: A 1.25" rain event (three hour duration) occurred on October 1, 2009. Sediment trap above Outfall 2 was in working condition and installed per the updated erosion control plans in the SWPPP; however, 3 rock check dams in ditch leading to outfall were over 50% capacity. Sediment-laden runoff from active cut slope exceeded check dams' capacity in ditch and overtopped sediment trap, causing a sediment release into Clear Creek]*

Environmental Impacts of Sediment Release: *[Describe the environmental impacts of the sediment release including impacts to habitat (i.e. fish kills), dimensions of the sediment impacts, and potential impacts to Threatened and Endangered Species list in the Ecology Report and SWPPP. State if any jurisdictional waters were impacted by sediment. Example: A sediment release impacted permitted stream of Clear Creek (STR-3). The observed impacts are sediment deposition approximately 750 ft downstream and approximately 2 ft wide, culminating at log weir. Average sediment depth was 3", ranging from 12" to ½" thick. No endangered species are noted in the area and no signs of aquatic life was impacted]*

Plans to Remove off-ROW Sediment: *[Describe how TDOT plans on removing sediment and who will be involved in removal. Example: TDOT notified TDEC Environmental Field Office on October 2, 2009 about sediment release to Clear Creek. TDOT plans to install a sandbag cofferdam upstream of sediment release and pipe stream flow around impacted area, discharging back into stream below log weir. Sediment will be removed from stream with hand tools and disposed of per requirements outlined in project SWPPP. Once sediment is removed, sandbag cofferdam will be removed; returning flow to stream. The contractor will perform sediment removal under supervision of Region Environmental Coordinator.]*

Plans to Prevent Future Impacts: *[Describe additional EPSC measure or change in drainage planned (or completed) to prevent repetitive sediment release in this location. Example: EPSC measures will be increased at and above Outfall 2. Two additional rock check dams have been constructed in ditch leading to Outfall 2 and sediment trap storage capacity has been increased. In addition, seed and erosion control blanket are scheduled to be installed on the cut slope at the end of the week.]*

Attach Additional Information: *such as Photographs and Erosion Control Plans indicating location of sediment release.* For sediment releases to jurisdictional waters that qualify for coverage under General ARAP for Sediment Removal and Stream Remediation, the TDEC CN-1091 form must also be completed.

CIRCULAR LETTER

SECTION: **209.01 PROJECT EROSION AND SILTATION CONTROL**
NUMBER: **209.01-05**
SUBJECT: **UTILITIES AND ENVIRONMENTAL CONSTRUCTION PERMITS**
DATE: **OCTOBER 2, 2015**

This circular letter addresses utility work within or adjacent to the TDOT right-of-way (ROW) and the associated environmental construction permits. The "Guidebook for Utility Relocation Related to TDOT Construction Projects" produced by the TDOT ROW Division Utilities Office contains additional information related to oversight of utility work on TDOT ROW or in TDOT Construction projects. Utilities are responsible for obtaining any needed easements or right-of-way for utility construction that extends beyond the TDOT ROW. All utility work that occurs within or adjacent to TDOT's ROW may be classified in one of the two following categories:

1. In Contract Moves: Utility work included in a TDOT Construction contract; or
2. Prior to Moves: Utility work not included in a TDOT Construction contract, including utility relocations performed by the utility prior to the beginning of a TDOT Construction contract.

The Project Supervisor should coordinate with the TDOT Regional Utility Office to determine which of these categories applies to each type of associated utility work and to obtain contact names and information for each utility. The Project Supervisor should discuss In-Contract Moves at the pre-construction meeting and at the environmental pre-construction meeting. This discussion should address areas where In-Contract Moves and Prior-To Moves extend outside the TDOT ROW. In addition, the Project Supervisor may direct the TDOT EPSC Inspector to conduct a pre-disturbance EPSC inspection before the utility work begins.

In-Contract Moves

For In-Contract Moves, the Prime Contractor for the construction project will coordinate all construction work activities (including utility work) for the contract. The utility work will be performed by either the Prime Contractor's forces or a subcontractor's forces. Any issues related to the utility construction process need to be brought to the Project Supervisor's and the Prime Contractor's attention immediately to allow for corrective action.

For In-Contract Moves, the TDOT Environmental Division's Natural Resources Office (NRO) obtains the environmental construction permits for the construction project, including the utility construction or installation work. Utility companies remain responsible for obtaining their own railroad permits, TDEC water or sewer approval permits or other operational permits for the utility facilities. The utility completes and signs the "Memorandum of Understanding (For Environmental Permits Required by Utility Construction)" (Form 2011-19) for the TDOT Right-of-Way Division. If the utility construction or installation work extends off the TDOT ROW, the utility is responsible for obtaining easements or additional right-of-way for areas adjacent to the TDOT ROW. In addition, the utility supplies the needed permit submittal information for all

utility construction or installation work to the Regional Utility Office and/or the Project Supervisor, who then provides the permit information to the TDOT NRO. Any environmental construction permit modifications or changes for In-Contract Moves should be coordinated with the TDOT NRO. The TDOT NRO will work with the regulatory agencies to obtain the permit modifications or changes.

For In-Contract Moves, the utility work cannot begin until the following steps are completed:

(1) the TDOT project's pre-construction meeting has been completed and
(2) notice has been given by the Prime Contractor to the TDOT Project Supervisor that utility work will commence and the Project Supervisor has approved the commencement. This notification process allows the Project Supervisor to arrange for personnel to conduct the required EPSC inspections.

The Prime Contractor will be responsible for installing the EPSC measures based on the TDOT EPSC plans and before construction starts. If the utility construction and installation extends outside the TDOT ROW, the Prime Contractor shall also be responsible for installing EPSC measures for the utility construction and installation. The TDOT EPSC plans for roadway construction may or may not be suitable or sufficient for the utility construction and installation. If installing the roadway construction EPSC measures at the time of utility relocation is not practical or suitable, the Prime Contractor may develop and submit an EPSC plan specifically for the utility relocation. Where an EPSC plan is developed specifically for utility relocation, the Prime Contractor must submit this EPSC plan to the TDOT District Operations Supervisor, or their designee, for acceptance. This specific EPSC plan for utility relocation should address utility construction and installation areas within the TDOT ROW and outside of the TDOT ROW. The cost for additional EPSC measures for specific EPSC plans for utility relocations shall be paid as increases in TDOT's roadway construction EPSC items.

EPSC inspections and Quality Assurance (QA) Audits shall include utilities in their routine inspections and assessments where the utilities are included in the Construction contract or where utility work is being performed at the same time as the construction project. The project's EPSC Inspector will be responsible for inspecting all areas included in the TDOT Construction contract. This includes roadway construction within the TDOT ROW and utility work on and off TDOT ROW. All EPSC recommendations related to utility work will be communicated to the Prime Contractor as directed by the TDOT District Operations Supervisor, or their designee, The QA Audit Team should include all areas included in the environmental construction permits in the QA Audit, including off-ROW utility work performed on utility easements or ROW. If the QA Auditor observes an issue related to the utility construction or installation work, the issue will be identified as a field observation or as a nonconformance according to the QA Audit procedures. Where necessary, the District Operations Supervisor, or their designee, will coordinate with the Prime Contractor, utility if performing the work, and/or the Regional Field Services Specialist to resolve the issue

Following construction completion, TDOT will terminate environmental construction permit coverage using TDOT's standard procedures. The utility is required to promptly complete Form DT-1716 following work completion and to submit the completed form to the Project Supervisor.

Prior-To Moves and Other Utility Work Not Included in a TDOT Construction Contract

When utility work is not included in a TDOT Construction contract, the Utility will perform the utility work separately from the construction project, but within or adjacent to TDOT's ROW. For these activities, the work will be performed by the Utility's contractor or work forces. The "Guidebook for Utility Relocation Related to TDOT Construction Projects" produced by the TDOT ROW Division Utilities Office instructs Utilities to notify TDOT Construction no less than three (3) days before beginning utility construction.

The Utility will be responsible for obtaining and complying with all environmental construction permits for Prior-To Moves and other utility work. The Utility will submit a completed and signed "Environmental Agreement for Utility Projects" form to the TDOT Right-of-Way Division prior to being released by TDOT to begin utility work on TDOT's ROW. The Utility will be responsible for installing EPSC measures and for performing EPSC inspections and other permit compliance items relative to its environmental construction permits. These projects are divided into two groups based on the following: (1) project disturbing more than one acre and (2) disturbed acreage less than one acre.

(1) rojects disturbing more than one acre – the Utility must submit a copy of the TDEC Notice of Coverage (NOC), SWPPP, any applicable water quality/resource alteration permits, and the completed "Environmental Agreement for Utility Projects" form (Form 2011-20) to the Regional Utility Office.
(2) Projects disturbing less than one acre – the Utility must submit the "Environmental Agreement for Utility Projects" form (Form 2011-20) to the Regional Utility Office.

If the utility relocation work is ongoing when the TDOT construction project begins construction, the TDOT EPSC Inspector will inspect all areas within TDOT's ROW (including utility work areas), but excluding any utility work areas that are outside the TDOT ROW. If directed by the TDOT District Operations Supervisor, or designee, and if the Utility is in agreement, the TDOT EPSC Inspector will attempt to conduct joint EPSC inspections with the Utility's EPSC Inspector. If the TDOT EPSC inspector's observations note an EPSC issue or other permit issue related to the utility work, the TDOT EPSC inspector will notify the TDOT District Operations Supervisor, or their designee. The TDOT District Operations Supervisor, or their designee, will coordinate with the Regional Utility Office and the Regional Field Services Specialist. The utility will be required to coordinate erosion control measures with the Project Supervisor in order that the Prime Contractors' erosion control and the Utility's erosion control are not disturbed, duplicated, or compromised by activities of the other.

The project's QA Auditor will begin QA Audits after the Prime Contractor starts TDOT project construction work using the QA Audit procedures. The QA Auditor will assess all areas within TDOT's ROW, but will not assess off-ROW utility work areas. If the QA Auditor observes an issue related to the utility construction or installation work at the QA Audit, the issue will be identified as a field observation or as a nonconformance according to the QA Auditor. Where necessary, the District Operations Supervisor, or their designee, will coordinate with the Right-of-Way Division Utilities Coordinator and/or the Regional Field Services Specialist to resolve the issue.

Following construction completion, the utility will be responsible for following the permit conditions to terminate the environmental construction permit coverage.

CIRCULAR LETTER

SECTION: **209-06**
NUMBER: **209.06-01**
SUBJECT: **UNDERGROUND INJECTION CONTROL (UIC) PERMIT PROCEDURE (PERMIT DURING CONSTRUCTION)**
DATE: **OCTOBER 2, 2015**

This Circular Letter establishes the procedures for applying for a **Class V Underground Injection Control (UIC) Permit** on an active construction project in the event that depressions (sinkholes with open throats) are encountered on or bordering the project site during construction activities. Karst landscapes are typically characterized by an irregular land surface usually formed on limestone from the surface and subsurface removal of rock mass by dissolution of calcite or dolomite. Karst areas normally have caves that developed as a result of dissolution along joints, bedding planes, or other openings. As ground water dissolves subsurface limestone, cave systems enlarge and eventually the overburden causes roofs of caves to collapse creating, on the surface, a bowl shaped land feature called a sinkhole. Sinkholes are a direct conduit to ground water.

When constructing in a Karst area, it is important to be aware of the potential for cave collapse and development of sinkholes and to be prepared to protect the Karst environment from storm water runoff.

When a sinkhole develops during active construction, it may be necessary to perform operation, maintenance, or repair work of an extraordinary or emergency nature which, if not performed promptly might result in risk of serious damage to the Karst environment or project. Immediately following sinkhole discovery, storm water diversion and Erosion Prevention and Sediment Control (EPSC) measures shall be installed at the sinkhole in an effort to minimize any deleterious effects of the construction project to the Karst environment.

Anyone who discharges industrial/commercial wastes into a subsurface system other than city sewers or who discharges storm water to an improved sinkhole is required to submit a UIC application to TDEC. For a TDOT construction project with no UIC Permit, a UIC Permit must be obtained for any sinkholes identified during construction prior to discharging storm water to the sinkhole.

Refer to the contract SP107FP and standard specifications **Subsection 107.08** and **Section 209** for additional information.

Most UIC permits for TDOT construction projects are issued through TDEC to the TDOT Environmental Division, Natural Resources Office (NRO). In order to expedite this process for an active construction site; the following steps shall be adhered to in the event a UIC permit is needed during the construction phase for the discovery of a previously unknown/uncovered open-throated sinkhole.

The Regional Operations Engineer (or their designee) shall be the single point of contact for this activity. The Regional Environmental Coordinator (REC) can be used as a resource or designee, if necessary.

Immediately following a sinkhole discovery and notification to the Regional Construction Supervisor (or their designee), the Project Supervisor (or their designee) shall implement appropriate EPSC measures and storm water diversion.

On projects with existing UIC permits:

A. Within seven (7) days (or as soon as possible) after discovery, the Regional Operations Engineer(or their designee) shall notify the TDOT Regional Environmental Coordinator by email. The email notification shall include the following information:
    1. Subject line "Sinkhole on TDOT Construction Project" with the existing UIC permit number, Contract Number, and County.
    2. Information as to whether there is an emergency (imminent threat to public safety).
    3. Date of sinkhole discovery.
    4. Description of the location of the sinkhole, including Latitude and Longitude. This can be found within the original application or permit issued, on the internet (e.g., www.topozone.com), with a GPS unit or on the topographic quadrangle map. This shall be in the form of Latitude XX.XXXX N, Longitude XX.XXXX W.
    5. Picture of the sinkhole.
    6. Actions taken to protect the sinkhole and corresponding Karst environment.
    7. Any intent to treat the sinkhole and the anticipated treatment plan (with drawing). Note: Treatment can be as per the approved sinkhole treatment plan or an applicable sinkhole treatment plan provided on TDOT's Geotechnical Website, https://www.tn.gov/tdot/materials-and-tests/geo-technical-operations.html.
    8. A copy of the current EPSC Plan from the field SWPPP with the approximate sinkhole location (A SWPPP will not be provided on all projects. If a SWPPP is not available for the project, then submit the EPSC construction plans).

B. The TDOT Regional Environmental Coordinator shall review the email to ensure that all required information is included and then will email the information listed above to the Environmental Division with a request to begin work. The Environmental Division will coordinate with the TDEC UIC Permit Coordinator, and the TDOT Geotechnical Division. A long term maintenance plan may be needed to maintain the structural and hydraulic integrity of the sinkhole. Treatment can begin after notification from the Environmental Division.

For projects without existing UIC permits:

A. As soon as possible after sinkhole discovery, the Regional Operations Engineer (or their designee) shall notify, by email, the TDOT Regional Environmental Coordinator with the following information:

1. Subject line must include the words "Sinkhole on TDOT Construction Project" with the Contract Number and County.
2. Information as to whether there is an emergency (imminent threat to public safety).
3. Date of sinkhole discovery.
4. Description of the location of the sinkhole, including Latitude and Longitude. This can be found within the original application or permit issued, on the internet (e.g., www.topozone.com), with a GPS unit or on the topographic quadrangle map. This shall be in the form of Latitude XX.XXXX N, Longitude XX.XXXX W.
5. Picture(s) of the subject sinkhole.
6. Actions taken to protect the sinkhole and corresponding Karst environment.
7. Any intent to treat the sinkhole and the anticipated treatment plan (with drawing).
8. The treatment plan, if any, obtained from the TDOT Geotechnical Office.
9. A copy of the current EPSC Plan from the field SWPPP with the approximate sinkhole location (A SWPPP will not be provided on all projects. If a SWPPP is not available on the project, then submit the EPSC construction plans).
10. The completed UIC (Class V Underground Injection Well) permit application form. (form found at: https://www.tn.gov/environment/permit-permits/water-permits1/underground-injection-control-permit.html)

B. The TDOT Regional Environmental Coordinator shall send a complete packet of information to the Environmental Division. The Environmental Division, Permits Section, will coordinate with the TDEC UIC Permit Coordinator. The anticipated timeframe for receipt of TDEC UIC permit coverage is within 30 days of receipt of a complete permit application. Sinkhole treatment shall not be initiated until the Environmental Division distributes authorization to TDOT Construction. Sinkhole treatment should occur immediately after receipt of permit.

C. Once the written approval/permit coverage or confirmed notification is received from TDEC, the Environmental Division, Permits Section, shall send a copy to the TDOT Regional Environmental Coordinator, the Regional Operations Engineer (or their designee), and the TDOT Compliance and Field Services.

CIRCULAR LETTER

SECTION: **407.04 BITUMINOUS MIXING PLANT**
NUMBER: **407.04-01**
SUBJECT: **HOT MIX ASPHALT PLANT INSPECTOR CHECKLIST**
DATE: **FEBRUARY 5, 2021**

The checklist for Asphalt Plant Inspectors is to be completed at the beginning of each project and periodically reviewed during the project to ensure compliance.

LINK TO FORM:

HotMixAsphaltPlantChecklist

CIRCULAR LETTER

SECTION: **407.09**
NUMBER: **407.09-01**
SUBJECT: **COLD WEATHER ASPHALT PAVING PROCEDURE**
DATE: **SEPTEMBER 1, 2017**

Subsection 407.09 allows the contractor to request approval for a variance from specified temperature and seasonal limitations to pave at lower temperatures when there is a benefit to the public. The request shall be in writing, be submitted at least one week prior to the anticipated need, and must include a "Paving and Compaction Plan for Cold Weather Asphalt Paving".

CIRCULAR LETTER

SECTION: **407.14 SPREADING AND FINISHING**
NUMBER: **407.14-01**
SUBJECT: **HOT MIX ASPHALT ROADWAY INSPECTOR CHECKLIST**
DATE: **MARCH 1, 2024**

The checklist shall be completed during the start of paving for each project and rechecked as needed as the project progresses. The checklist shall be completed during the test strip construction while verifying mixture properties by the Team Lead, or their designated representative.

If the contractor does not comply with the specifications, as outlined in the checklist, then paving shall be stopped and not allowed to proceed until in compliance.

When paving at nighttime, the contractor shall not be allowed to begin paving unless the lighting is in accordance with the approved lighting plan.

LINK TO FORM:

Hot Mix Asphalt Roadway Inspector Checklist

CIRCULAR LETTER

SECTION: **602.42 ERECTION OF STEEL STRUCTURES**
NUMBER: **602.42-01**
SUBJECT: **PRE-ERECTION CONFERENCE**
DATE: **MARCH 15, 2024**

A pre-erection conference on the project site should be held prior to erecting steel members for bridge construction. The conference should include discussion on methods of erection; equipment utilized; traffic control; safety precautions; and any questions or concerns of those persons involved in the erection.

In addition to the Team Lead, the conference should include representation from the following:

1. The Contractor
2. The Erector
3. The Structures Division
4. The Project Field Personnel

CIRCULAR LETTER

SECTION: **603.13 REPAINTING OF EXISTING STEEL STRUCTURES**
NUMBER: **603.13-01PRE-ERECTION CONFERENCE**

SUBJECT: **ABRASIVE BLASTING/WATER WASHING ACTIVITIES GUIDANCE**
DATE: **OCTOBER 2, 2015**

Requirements outlined in this guidance apply to all abrasive blasting/water washing activities that are organized or coordinated by TDOT District Operations Engineer, including: painting; blasting with sand, slag, steel shot or grit; and water washing of bridges. For each abrasive blasting/water washing project, the onsite TDOT District Operations Engineer shall ensure completion of the following:

(1) A minimum of two weeks prior to commencement of any project involving blasting/water washing of bridges or steel structures, the TDOT Environmental Facilities Compliance Office is notified of the project and schedule. The Division address and contacts are:

TDOT Environmental Facilities Compliance Office
Mr. Barry Brown, Manager
Suite 900 James K. Polk Bldg.
505 Deaderick Street
Nashville, TN 37243

Regional Environmental Coordinator

(2) On the first day that abrasive blasting/water washing begins, a "split" sample is collected and submitted for TCLP metals analysis (a "split" sample is defined as a sample that is collected directly from the sample that the contractor collects for testing). The TDOT Environmental Facilities Compliance Office shall arrange for the split sample to be collected/analyzed, and the onsite TDOT District Operations Engineer shall ensure collection of the sample.

(3) The TDOT Environmental Facilities Compliance Office receives a copy of the contractor's test results to compare with the results of Toxicity Characteristic Leaching Procedure (TCLP) metals analysis of the "split" sample. A copy of the test results from the contractor's sample shall be submitted to the TDOT Environmental Facilities Compliance Division within two weeks of receipt from the testing laboratory.

(4) Abrasive blasting/water washing wastes are not disposed onsite. These wastes are disposed as hazardous wastes per TN Rule 1200-1-11 or as special wastes per TN Rule 1200-1-7.

(5) The TDOT Environmental Facilities Compliance Office receives a copy of any Hazardous Waste Notification Form ("HN Form") submitted by the contractor to TDEC, if applicable. A copy of the HN Form shall be submitted to the TDOT Environmental Facilities Compliance Division at the same time the form is submitted to TDEC.

(6) The TDOT Environmental Facilities Compliance Office receives a copy of any Hazardous Waste Stream Report ("Attachment WS") that is submitted to TDEC by the TDOT contractor/subcontractor (typically submitted in conjunction with the HN Form). A copy of Attachment WS shall be submitted to the TDOT Environmental Facilities Compliance Office at the same time the form is submitted to TDEC.

(7) The TDOT Environmental Facilities Compliance Office is listed as the responsible facility on all waste manifests, using the address and contact information listed in item # 1, above.

(8) The TDOT Environmental Facilities Compliance Office receives copies of all hazardous waste manifests, non-hazardous waste manifests, or other shipping papers as appropriate. For hazardous waste manifests, the generator copy shall be submitted to the TDOT Environmental Facilities Compliance Office within two weeks of the date of waste shipment. The returned copy of the manifest from the treatment, storage, disposal facility (TSDF) shall be submitted to the TDOT Environmental Facilities Compliance Office within two weeks of receipt from the TSDF.

(9) The contractor/subcontractor provides disposal facility contact information (including facility name, installation ID number, location, mailing address, contact person and phone number) to the TDOT District Operations Engineer, or their designee, in a timely manner. Within two weeks of receipt of this information from the contractor/subcontractor, disposal facility contact information shall be sent to the TDOT Environmental Facilities Compliance Office for proper record keeping.

CIRCULAR LETTER

SECTION: **604.01 CONCRETE STRUCTURES - DESCRIPTION (GENERAL)**
NUMBER: **604.01-01**
SUBJECT: **REQUEST FOR MARKING REPAIR AREAS BY BRIDGE REPAIR DIVISION**
DATE: **MAY 1, 2024**

When requesting inspection by the Structures Division for the purpose of locating and marking repair areas, the following procedures should be followed:

1. Notify the Region & Repair office a minimum of three (3) days in advance of the scheduled work.

2. The deck to be marked should be scarified (if required), cleaned and traffic control set up before the marking team arrives.

3. The Team Lead is to furnish one person to assist in marking the decks.

CIRCULAR LETTER

SECTION: **604.01 DEFINITIONS AND TERMS**
NUMBER: **604.01-03**
SUBJECT: **AMERICAN WELDING SOCIETY (AWS) – CERTIFICATION**

All field welding must be in conformance with the American Welding Society (AWS) D1.5 Bridge Welding Code and accomplished by an AWS Certified Welder. Said certification must have been administered by a Certified Welding Inspector (CWI).

The following is a partial listing of companies currently staffed to administer AWS Certification Tests:

PSI (Pittsburgh Testing Laboratory), Nashville, TN
World Testing, Mt. Juliet, TN
American Industrial Testing & Analytical Laboratories, Memphis, TN
Quality Control & Inspections, Knoxville & Memphis, TN

For reference, a sample qualification record from the AWS D1.5 Bridge Welding Code is attached detailing the pertinent information needed on all certifications. The contractor/welder may have a different form than the one attached, however the information detailed on the form must include the information shown on the reference document. In addition, the Team Lead may be able to verify the Welder's Certification by entering the Certification Number on the AWS website (www.aws.org).

WELDER AND WELDING OPERATOR QUALIFICATION TEST RECORD

Welder or welding operator's name _____ Identification no. _____
Welding process _____ Manual _____ Semiautomatic _____ Machine _____
Position _____
(Flat, horizontal, overhead or vertical — if vertical, state whether upward or downward)
In accordance with procedure specification no _____
Material specification _____
Diameter and wall thickness (if pipe) — otherwise, joint thickness _____
Thickess range this qualifies _____

FILLER METAL

Specification no. _____ Classification _____ F no. _____
Describe filler metal (if not covered by AWS specification) _____

Is backing strip used? _____
Filler metal diameter and trade name _____ Flux for submerged arc or gas for gas metal arc or flux cored arc welding _____

VISUAL INSPECTION (9.25.1)

Appearance _____ Undercut _____ Piping porosity _____

Guided Bend Test Results

Type	Result	Type	Result

Test conducted by _____ Laboratory test no. _____
per _____ Test date _____

Fillet Test Results

Appearance _____ Fillet size _____
Fracture test root penetration _____ Marcoetch _____
(Describe the location, nature, and size of any crack or tearing of the specimen.)
Test conducted by _____ Laboratory test no. _____
per _____ Test date _____

RADIOGRAPHIC TEST RESULTS

Film identification	Results	Remarks	Film identification	Results	Remarks

Test witnessed by _____ Test no. _____
per _____

We, the undersigned, certify that the statements in this record are correct and that the welds were prepared and tested in accordance with the requirements of AASHTO/AWS D1.5, (_____) Bridge Welding Code.
(year)

Manufacturer or contractor _____
Authorized by _____
Date _____

Form E-4

CIRCULAR LETTER

SECTION: **601.01 DESCRIPTION (GENERAL)**
NUMBER: **604.01-04**
SUBJECT: **STAKE OUT OF STRUCTURES**
DATE: **JULY 1, 1992**

Prior to commencing construction on a bridge, project personnel shall check the stake out of the structure by using either an alternate method or checked by an independent party. All stake out data shall be made a part of the project records.

CIRCULAR LETTER

SECTION: **604.03 CLASSIFICATION, PROPORTIONING AND QUALITY ASSURANCE OF CONCRETE**
NUMBER: **604.03-01**
SUBJECT: **CONCRETE DELIVERY TICKETS**
DATE: **MARCH 15, 2024**

When concrete is delivered to a project, it is the TDOT Inspector's responsibility to verify that the concrete delivery ticket includes the information specified in Section 604 of the Standard Specifications and/or part 600 of the Supplemental Specifications.

The inspector should also verify the Batch Time and note the Discharge Time on the ticket. The inspector should sign the ticket and keep a copy for the project records.

The following is a suggested method for arriving at water calculations and proper recording of mixing revolutions:

Maximum Water (per approved design) – This quantity represents the total amount of water that may be added at any time to the mix and still not exceed the water-cementitious material ratio. For instance, if your concrete design indicates a mix based on 33 gallons per C.Y. with an additional 2.5gallons per C.Y. noted under remarks, the Maximum Water (Design) would be (33+2.5) 35.5 gallons per C.Y. times the number of C.Y. batched.

Batched Water (at the plant) – This quantity represents the amount of water metered into the mix plus the quantity that was present in the aggregates indicated by your moisture tests. For instance, if the free moisture in the fine and coarse aggregate is 16 gallons and the amount of water metered is 246 gallons, the Batched Water would equal 262 gallons.

Project Water – The difference the Maximum Water and the Batched Water indicates to the roadway inspector the amount of water that may be added at the job site.

$$Project\ Water = Maximum\ Water - Batch\ Water$$

Mixing revolutions at the plant and job site are to be recorded. The mixing revolutions are to be witnessed by the inspector and noted on the tickets for all concrete. The inspector will document any alterations to the mixture (e.g., water, air entrainer, chemical admixture) and ensure that a minimum additional 30 revolutions are completed per **604.13**.

Trucks with revolution inoperable counters are not to be used.

CIRCULAR LETTER

SECTION: **604.05 PRECAST PRESTRESSED BRIDGE DECK PANELS**
NUMBER: **604.05-01**
SUBJECT: **POST ERECTION BRIDGE DECK PANEL DEFICIENCY CHECK**
DATE: **MARCH 15, 2024**

After pouring a bridge deck which has precast deck panels, the Team Lead should request the Structures Division to review and report any deficiencies found in the deck panels prior to final acceptance.

When a report indicates deficiencies, the Team Lead should notify the District Manager and the Contractor, in writing, of the type of deficiencies. A decision will be made advising of necessary corrective action to take. The project will not be accepted as complete until all necessary repair work has been completed.

CIRCULAR LETTER

SECTION: **604.16 CONCRETE STRUCTURES**
NUMBER: **604.16-01**
SUBJECT: **BRIDGE DECK CONSTRUCTION CHECKLIST**
DATE: **FEBRUARY 5, 2021**

The link contains a bridge deck construction checklist procedure to be followed for prepour during and post pour for bridge deck pours and a list of factors that adversely affect deck construction.

LINK TO FORM:

Bridge Deck Construction Checklist

CIRCULAR LETTER

SECTION: **604.21 DEFECTIVE CONCRETE**
NUMBER: **604.21-01**
SUBJECT: **EVALUATION OF LOW STRENGTH CONCRETE**
DATE: **MAY 21, 2024**

Subsection 604.20 of the Standard Specifications grants the Engineer the discretionary authority of allow concrete which fails to meet the design strength to remain in place, subject to the price adjustment set out in Subsection 604.31 and provided its durability is good and it is considered structurally adequate. To aid in administering this provision, the Structures Division has prepared the Low Cylinder Evaluation Guide (LCEG) shown on page two of this circular letter.

In concordance with the LCEG, test results for low strength concrete are to be processed as follows:

1. Cast in place concrete within the tolerances permitted by the LCEG may be accepted by the District Office provided the concrete is considered durable and structurally sound.

   A completed Concrete Cylinder Strength Evaluation Form is to be sent for information to the local Materials and Tests Field Services Team Lead, and to the FHWA on non-exempt Federal-aid projects. The Contractor is to be advised in writing of the action taken.

   On the Concrete Cylinder Strength Evaluation Form under "REGION" it should be noted that the concrete represented by the low cylinders is considered structurally adequate and may remain in place subject to the adjustment in contract price provided in Subsections 604.20 and 604.31. The statement "As noted above", or similar wording, should be written under "Proposed Disposition"; and "Not Applicable (N/A)" should be written on the approval lines at the bottom of the form.

2. Test results for cast-in-place concrete with strength less than permitted by the tolerances in the LCEG are to be submitted for approval to the Headquarters Construction Division in accordance with our past practices.

3. Test results for precast or prestressed products below the specified design values shown on the Approved Shop Drawings are to be submitted to the Materials and Tests Division for evaluation and coordination with the Structures Division, and with the FHWA on non-exempt Federal-aid projects.

   The Concrete Cylinder Strength Evaluation Form, modified as applicable, may be used to process low test results for precast or prestressed concrete products.

LOW CYLINDER EVALUATION GUIDE

BRIDGE/STRUCTURE MEMBER	STRUCTURAL REVIEW REQUIRED
CIP Concrete Except as Noted	Notes 1 and 2 (CIP)
	Notes 2 and 3 (PC), (PS)
Bridge Railing & Median Barriers	200 psi
Bridge Deck & Diaphragms	500 psi
Concrete Girders	100 psi
Concrete Girders, Panels & Piles (PC or PS)	Note 3
Bent Caps, Columns, & Drilled Shafts	200 psi
Bent Footings	500 psi
Abutment Walls & Wings	200 psi
Retaining Walls & Footings	200 psi
Box Bridge Slabs & Walls	200 psi
Box Bridge Slabs & Walls (PC)	Note 3
Expansion Joint Concrete Repair	500 psi
Culvert Headwalls (Precast) & other Miscellaneous Precast Items	Note 3

NOTES

1. If concrete test cylinder breaks for cast-in-place (CIP) members fall below the specified values shown in the plans by more than these values, an evaluation will be required in the Structures Division.
2. Design values are based on 3,000 psi concrete, except bridge decks are 4,000 psi. See shop drawings for precast (PC) and prestressed (PS) members.
3. Any test cylinder breaks below the values shown on approved shop drawings for precast (PC) or prestressed (PS) members will be evaluated by the Materials and Tests Division.

Concrete Cylinder Strength Evaluation Form

CIRCULAR LETTER

SECTION: 705.01 GUARDRAIL AND END TERMINALS
NUMBER: 705.05-01
DATE: MARCH 24, 2022
SUBJECT: INSTALLATION OF GUARDRAIL AND END TERMINALS

THIS CIRCULAR LETTER IS INTENDED FOR USE ON GUARDRAIL AND END TERMINAL INSTALLATIONS. MAINTENANCE REPLACEMENT/ADJUSTMENT INSTALLATIONS SHOULD USE CIRCULAR LETTER 705.05-02.

Installation of new guardrail, guardrail end terminals, anchors, attenuators, and transitions, etc. shall be performed in accordance with the appropriate section(s) of the TDOT Standard Specifications, Special Provisions, the appropriate TDOT Roadway Standard Drawings, and/or Manufacturer's Shop Drawings.

INSPECTION

The TDOT inspector should complete the attached Daily Guardrail Installation Checklist. The Checklist must be signed by both the TDOT inspector and the guardrail installer.

INSTALLATION DECALS

Installation decals shall be applied to all guardrail end terminals. The decals should be placed on the guardrail end terminal in an area that is least likely to be damaged on impact, see example below:

RECOMMENDATION FOR TAGGING GUARDRAIL END TERMINALS

EXAMPLE OF LOCATION FOR END TERMINAL TAG LOCATION

TENNESSEE DEPARTMENT OF TRANSPORTATION											
TO REPORT DAMAGE CALL 615-350-4300											
INSTALLATION DATE						CONTRACT NUMBER					
MONTH						W	X	Y	Z		
1	2	3	4	5	6	0	1	2	3	4	5
7	8	9	10	11	12	0	1	2	3	4	5
YEAR						0	1	2	3	4	5
22	23	24	25	26							

6	7	8	9						
6	7	8	9						
6	7	8	9						

The above tag is an all-weather decal that will adhere to any material including metal and wood. A hole punch is used to specify the installation date and contract number. The design is similar to the tag used for highway signs fabricated by the Department of Transportation. The tag should be placed on the guardrail end terminal in an area that is not likely to be damaged on impact, similar to the example above. These tags will be installed on new guardrail end terminals on both new construction and on-call maintenance projects.

ALTERNATIVE INSTALLATIONS

This section is intended to address difficulties in the installation of guardrail due to field conditions. It may be necessary to elevate some issues to the Regional Project Development Divisions for further investigation and guidance. Use the following guidance if a field condition requires alternative placement and/or prevents the installation of line guardrail. Installation variances shall be documented in the Daily Guardrail Installation Checklist.

1. If underground structure or utility conflicts preventing the installation of guardrail posts to specified location:

    a) Omit posts as shown on Standard Drawing S-GRS-1.
    b) Install guardrail post with concrete slab per Standard Drawing S-GRS-3, if more than one post conflicts.
    c) Install posts per Standard Drawing S-GRS-6 if posts cannot be installed at standard spacing or location.

2. If guardrail posts installed on existing bridge deck or culvert:

    a) Install posts on concrete bridge deck per Standard Drawing S-GRS-2
    b) Install posts on bridge deck curb or outside face of bridge deck or culvert face per Standard Drawings S-GRS-5, 5A, 5B, or 5C.

3. If rigid objects or utilities are located immediately behind the guardrail beam inside the deflection zone (working width is 5’ from the face of GR to rigid object), reduce the deflection rates by adding additional guardrail posts. Refer to the table below for guidance on determining the reduction in deflection of single W-beam rail, based on post spacing.

Deflection Reduction based on post spacing			
	Post spacing		
	Full (6’-3”)	½ spacing	¼ spacing
Deflection	3.5’	3’	2.5’

4. The fill slope (post embedment in soil) shape plays significant role in the performance of the guardrail system. Refer to the Standard Drawing S-PL-6 for further guidance about roadside safety hardware placement.

    a) Where possible, add 2’ wide additional embankment behind the post to obtain proper embedment. A minimum of 36” embedment of posts must be maintained. Do not fill in ditches, streams, wetlands, or impact environmental features. Use select material to achieve the required post embedment in the vicinity of environmentally sensitive areas. All work shall be performed within Right of Way.
    b) All slopes 6:1 or less minimum post length shall be 6 ft. All steeper slopes shall have a minimum post length of 8 ft.

5. If guardrail posts are installed in rock, follow the standard drawing S-GR31-1D. Any post holes that are drilled in rock shall be documented on the Daily Guardrail Installation Checklist and payment shall be in accordance with the specifications.

6. If length of need is deficient. At some locations, length of need conditions may be evaluated to improve placement of the guardrail system. This may be accomplished by adjusting the existing guardrail to a total length of 200 ft. for posted speeds less than or equal to 45 mph or 300 ft. for posted speeds above 45 mph. If additional guidance is needed refer to Standard Drawing S-PL-1, or 1A to determine length of need. If guardrail terminal falls inside the roadway horizontal curve refer to Standard Drawing S-PL-1B to determine length of need.

7. Another option is to install a buried in back slope terminal per Standard Drawing S-GRT-1, 1A or 1B, if the roadway is in a cut section approaching to hazard. Alternatively, if rock bluff or concrete barrier wall is present, anchor the terminal end per Standard Drawing S-GRA-5

If the earth pad for a tangential GR end terminal is missing or deficient. Refer to Standard Drawings S-GRT-2R or 3P for minimum required earth pad dimensions. If an earth pad cannot be installed as shown on the referenced standard drawings due to extreme site conditions, apply best engineering practices. Earth pad shall be selected material for all rehabilitation projects.

The proposed solutions described above shall be implemented only when approved by the Project Supervisor.

For additional guidance refer to FHWA Roadside Hardware Policy and Guidance:
http://safety.fhwa.dot.gov/roadway_dept/policy_guide/road_hardware/
https://safety.fhwa.dot.gov/roadway_dept/countermeasures/resources.cfm
https://safety.fhwa.dot.gov/roadway_dept/countermeasures/docs/PostBeamJan2016Safelogo.pdf
https://safety.fhwa.dot.gov/roadway_dept/countermeasures/docs/RoadTerminals_Nov2015Safelogo.pdf

Forms:

DAILY GUARDRAIL INSTALLATION CHECKLIST (GR only)
DAILY GUARDRAIL INSTALLATION CHECKLIST (MSKT)
DAILY GUARDRAIL INSTALLATION CHECKLIST (SoftStop)
DAILY GUARDRAIL INSTALLATION CHECKLIST (SGET)

CIRCULAR LETTER

SECTION: 705.01 GUARDRAIL AND END TERMINALS
NUMBER: 705.05-02
DATE: MARCH 24, 2022
SUBJECT: MAINTENANCE REPLACEMENT/ADJUSTMENT GUARDRAIL AND END TERMINALS

THIS CIRCULAR LETTER IS INTENDED FOR USE ON MAINTENANCE REPLACEMENT/ADJUSTMENT CONTRACTS ONLY. OTHER INSTALLATIONS SHOULD USE CIRCULAR LETTER 705.05-01.

Replacement and adjustment of existing guardrail installations, guardrail end terminals, bridge transitions, and adjustment of guardrail height, etc., shall be performed in accordance with the appropriate section(s) of the TDOT Standard Specifications, Special Provisions, the appropriate TDOT Roadway Standard Drawings, and/or Manufacturer's Shop Drawings.

INSPECTION

The TDOT inspector should complete the attached Daily Guardrail Installation Checklist. The Checklist must be signed by both the TDOT inspector and the guardrail installer.

INSTALLATION DECALS

Installation decals shall be applied to all guardrail end terminals. The decals should be placed on the guardrail end terminal in an area that is least likely to be damaged on impact, see example below:

RECOMMENDATION FOR TAGGING GUARDRAIL END TERMINALS

EXAMPLE OF LOCATION FOR END TERMINAL TAG LOCATION

TENNESSEE DEPARTMENT OF TRANSPORTATION															
TO REPORT DAMAGE CALL 615-350-4300															
INSTALLATION DATE						CONTRACT NUMBER									
MONTH							W		X		Y		Z		
1	2	3	4	5	6	0	1	2	3	4	5	6	7	8	9
7	8	9	10	11	12	0	1	2	3	4	5	6	7	8	9
YEAR						0	1	2	3	4	5	6	7	8	9
22	23	24	25	26											

The above tag is an all-weather decal that will adhere to any material including metal and wood. A hole punch is used to specify the installation date and contract number. The design is similar to the tag used for highway signs fabricated by the Department of Transportation. The tag should be placed on the guardrail end terminal in an area that is not likely to be damaged on impact, similar to the example above. These tags will be installed on new guardrail end terminals on both new construction and on-call maintenance projects.

GUARDRAIL ADJUSTMENT

Minor adjustments to existing guardrail beam less than 50' shall be replacement in kind. If the damaged section is longer than 50' and/or includes guardrail end terminal, replace the section with 31" guardrail and transition back to 28" guardrail using the Standard Drawing S-GRS-4.

Replacement/Adjustment of guardrail sections should have a minimum height of 28 inches. To measure guardrail height, refer to Standard Drawing S-PL-6. Refer to Standard Drawing S-GR28-3M for guardrail height adjustment requirements.

Note: guardrail heights of 25" or more may remain on existing roadways with posted speed limits less than 45 mph at locations with no frequent crash history.

ALTERNATIVE INSTALLATIONS

This section is intended to address difficulties in the installation of guardrail due to existing field conditions. It may be necessary to elevate some issues to the Regional Project Development Divisions for further investigation and guidance. Use the following guidance if a field condition requires alternative placement and/or prevents the installation of line guardrail. Installation variances shall be documented in the Daily Guardrail Installation Checklist.

1. If underground structure or utility conflicts preventing the installation of guardrail posts to specified location:

    a) Omit posts as shown on Standard Drawing S-GRS-1.
    b) Install posts with concrete slab per Standard Drawing S-GRS-3, if more than one post conflicts.
    c) Install posts per Standard Drawing S-GRS-6 if posts cannot be installed at standard spacing or location.

2. If guardrail posts are installed on existing bridge deck or culvert:

    a) Install posts on concrete bridge deck per Standard Drawing S-GRS-2.
    b) Install posts on bridge deck curb or outside face of bridge deck or culvert face per Standard Drawings S-GRS-5, 5A, 5B, or 5C.

3. If rigid objects or utilities are located immediately behind the guardrail beam inside the deflection zone (working width is 5' from face of guardrail to rigid object), reduce the deflection rates by adding additional guardrail posts. Refer to the table below for guidance on determining the reduction in deflection of single W-beam rail, based on post spacing.

Deflection Reduction based on post spacing			
	Post spacing		
	Full (6'-3")	½ spacing	¼ spacing
Deflection	3.5'	3'	2.5'

4. If anchors attaching guardrail to concrete bridge parapet wall are damaged: If existing anchors cannot be reused due to excessive damage, relocation of attachment is required. New attachment may be accomplished by using hex head ½"diameter bolts embedded 5" into existing concrete. If the existing rail will not allow such installation, new holes shall be drilled through the existing parapet wall. Care shall be taken to ensure that excessive damage does not occur to the back of the parapet wall when drilling. Excessive damage shall be repaired at the contractor's expense using approved concrete patching materials or possible removal and replacement of damaged parapet wall section. Bolts shall be placed completely through the wall with galvanized bearing plates on the back as referenced in Standard Drawing SBR-2-134 or using epoxy systems, such as Hilti 500 (refer to QPL miscellaneous section for approved alternative systems).

5. The fill slope (post embedment in soil) shape plays significant role in the performance of the guardrail system. Refer to the Standard Drawing S-PL-6 for further guidance about roadside safety hardware placement.

    a) Where possible, add 2' wide additional embankment behind the post to obtain proper embedment. A minimum of 36" embedment of posts must be maintained. Do not fill in ditches, streams, wetlands, or impact environmental features. Use select material to achieve the required post embedment in the vicinity of environmentally sensitive areas. All work shall be performed within Right of Way.
    b) All slopes 6:1 or less minimum post length shall be 6 ft. All steeper slopes shall have a minimum post length of 8 ft.

6. If guardrail posts are installed in rock, follow Standard Drawing S-GR31-1D. Any post holes that are drilled in rock shall be documented on the Daily Guardrail Installation Checklist and payment shall be in accordance with the specifications.

7. If length of need is deficient. At some locations, length of need conditions may be evaluated to improve placement of the guardrail system. This may be accomplished by adjusting the existing guardrail to a total length of 200 ft. for posted speeds less than or equal to 45 mph or 300 ft. for posted speeds above 45 mph. If additional guidance is needed refer to Standard Drawing S-PL-1 or 1A to determine length of need. If guardrail terminal falls inside the roadway horizontal curve refer to Standard Drawing S-PL-1B to determine length of need.

8. Another option is to install a buried in back slope terminal per Standard Drawing S-GRT-1, 1A or 1B, if the roadway is in a cut section approaching to hazard. Alternatively, if rock bluff or concrete barrier wall is present, anchor the terminal end per Standard Drawing S-GRA-5.

If the earth pad for a tangential GR end terminal is missing or deficient. Refer to Standard Drawings S-GRT-2R or 3P for minimum required earth pad dimensions. If an earth pad cannot be installed as shown on the referenced standard drawings due to extreme site conditions, apply best engineering practices. Earth pad shall be selected material for all rehabilitation projects.

The proposed solutions described above shall be implemented only when approved by the Project Supervisor.

ADDITIONAL GUIDANCE

For additional guidance refer to FHWA Roadside Hardware Policy and Guidance at:
http://safety.fhwa.dot.gov/roadway_dept/policy_guide/road_hardware/
https://safety.fhwa.dot.gov/roadway_dept/countermeasures/resources.cfm
https://safety.fhwa.dot.gov/roadway_dept/countermeasures/docs/PostBeamJan2016Safelogo.pdf
https://safety.fhwa.dot.gov/roadway_dept/countermeasures/docs/RoadTerminals_Nov2015Safelogo.pdf

Forms:

DAILY GUARDRAIL INSTALLATION CHECKLIST (GR only)
DAILY GUARDRAIL INSTALLATION CHECKLIST (MSKT)
DAILY GUARDRAIL INSTALLATION CHECKLIST (SoftStop)
DAILY GUARDRAIL INSTALLATION CHECKLIST (SGET)

CIRCULAR LETTER

SECTION: **712.04**
NUMBER: **712.04-01**
SUBJECT: **REDUCTION OF SPEED LIMIT IN ACTIVE CONSTRUCTION ZONES**
DATE: **JULY 2, 2018**

In order to enhance safety for both the motoring public and construction personnel, the Department will permit, upon written request and written approval by the State Traffic Engineer, the Contractor to erect signs for reduced speed limits as warranted by the Traffic Engineering Office's *Guidance on Setting Speed Limits*. The TDOT Project Supervisor shall first review the guidelines to determine if the reduction in speed is warranted before forwarding the request to the Regional Traffic Engineer, who will then review and forward the request to the State Traffic Engineer for processing if they agree the reduced speed is warranted.

The intent is to allow a reduction of the legal speed limit for the shortest period warranted in the area of active construction work as outlined in the guidelines. The reduced speed limit signs are to be furnished, erected, maintained, removed, and covered as needed at the contractor's expense. They are to be used only for the immediate area impacted by construction. Any damage to existing speed limit signs will require the Contractors to replace these signs at their expense.

There are two types of regulatory work zone speed limits. A Variable Work Zone Reduction allows for the regulatory limit to be lowered as needed based on conditions that are temporary in nature and change frequently during the life of the project (i.e. workers present). This type of reduction is only authorized while the qualifying conditions are present. When qualifying conditions are not present, failure to cover short-term speed limit signs will result in traffic control inspection non-compliance.

The second type is the Continuous Work Zone Reduction, which allows for the regulatory limit to be lowered as needed based on conditions that are longer in duration (ie. lane shifts). This type of reduction is authorized for 24 hour continuous posting, but may resort to a variable if the conditions change.

Speed Limit Reduction Request Form

Speed Limit Reduction Request Form

Contract #: _____ Project #: _____

County: _____ Route #: _____

Project Limits: _____

TDOT Supervisor: _____ Estimated Completion Date: _____

Prime Contractor: _____

Reduction Request Type: Variable or Continuous Existing Speed Limit: _____

Requested Speed Limit: _____ (**Note: Work zone speed limit reductions larger than 10 MPH are undesirable and should be avoided except where required by restricted geometrics or other work zone features that cannot be modified.)**

Description of work/ reason for requested reduction (identify condition and factors from Guidelines):

_____

_____

_____

_____

- Does the Construction activity occur within 10 FT of the edge of the travel way? _____
- Are workers present for extended periods within 10 FT of the traveled way unprotected by barriers? _____
- Are barriers or pavement edge drop-offs present within 2 FT of traveled way? _____
- Are lane widths being reduced? _____ If yes, to what width? _____
- Is traffic being shifted in the work zone? _____

_____ _____

TDOT Operations Project Supervisor Approval Signature

TDOT Reg. Traffic Engineer Approval Signature

CIRCULAR LETTER

SECTION: **712.04 TEMPORARY TRAFFIC CONTROL - GENERAL**
NUMBER: **712.04-02**
SUBJECT: **REVIEW AND APPROVAL OF PROPOSED TRAFFIC CONTROL PRIOR TO MAJOR DISRUPTIONS OF EXISTING TRAFFIC PATTERNS**
DATE: **FEBRUARY 1, 1994**

Anytime proposed construction requires major disruption to existing traffic patterns, the Regional Traffic Engineer is to be consulted. The Regional Traffic Engineer should be provided details on the proposed disruption, including but not limited to advance warning, possible alternate routes, type of disruption, time and length of disruption, Contract Plans, etc. The Regional Traffic Engineer should review, modify if needed, and approved the proposed plan prior to implementation. The Regional Traffic Engineer's guidance is crucial to minimize negative impacts and to maximize safety for the public.

Such major disruptions could include closures of interstate, primary, major arterials and/or secondary highways; lane closures on urban interstates or major arterials; and any other disruptions deemed appropriate.

CIRCULAR LETTER

SECTION: **712.04 TEMPORARY TRAFFIC CONTROL**
NUMBER: **712.04-04**
SUBJECT: **GUIDELINES FOR LAW ENFORCEMENT USE ON TDOT PROJECTS**
DATE: **FEBRUARY 5, 2021**

Definition of Terms

Uniformed Law Enforcement Officer: (Uniformed State Commissioned Police Officer or Tennessee Highway Patrol Trooper) A law enforcement officer, with a marked law enforcement vehicle equipped with blue lights, having the authority to write traffic tickets and make arrests at the project site.

Introduction

These guidelines were developed to provide guidance addressing the use of uniformed law enforcement on Federal-aid highway projects in accordance with the Federal Highway Administration's (FHWA) ruling on Temporary Traffic Control Devices (23 CFR 630 Subpart K). Specifically, these guidelines address:

1) General nature of law enforcement services to be provided
2) Conditions where law enforcement in work zones may be needed or beneficial
3) Determining need and priority for law enforcement services based on project-specific factors and characteristics
4) Provision of Uniformed Law Enforcement officers and project-level communications
5) Compensation of law enforcement services
6) Required documentation
7) Officer training requirements

General Nature of Law Enforcement Services

The primary function of the Uniformed Law Enforcement officer is to enforce regulatory speeds and coordinate the removal of vehicles with the Tennessee Department of Safety and/or other law enforcement agencies having jurisdiction through the work zone. Authorization to move a vehicle involved in a traffic accident is retained exclusively by law enforcement officers.

Uniformed Law Enforcement officers may also be used:

1) When a new phase of traffic control must be implemented to provide brief stoppage of traffic to allow Contractors to re-align traffic control devices, erect new signs, apply new pavement markings and/or prepare the highway for traffic.
2) In areas where excessive speeding or crashes are common.
3) On high-speed roadways to position law enforcement in advance of traffic queues to alert approaching motorists of stopped traffic.
4) To mitigate safety and congestion impacts by improving the driver behavior and alertness of the work zone.

Note: In no case shall Uniformed Law Enforcement officers be used to replace flaggers.

Determining Need and Priority for Project-Specific Services

In general, the need for law enforcement is greatest on projects with high traffic speeds and volumes, and where the work zone is expected to result in substantial disruption to or changes in normal traffic flow patterns. Conditions should be examined on a per-project basis to determine the need for or potential benefit of law enforcement. Project factors and characteristics used to determine need may include, but are not limited to:

1) Project scope and duration.
2) Anticipated traffic speeds through the work zone.
3) Anticipated traffic volume.
4) Vehicle mix.
5) Type of work (as related to worker exposure and crash risks).
6) Distance between traffic and workers, and extent of worker exposure.
7) Escape paths available for workers to avoid a vehicle intrusion into the workspace.
8) Time of day (e.g., night work).
9) Work area restrictions (including impact on worker exposure).
10) Consequences from/to road users resulting from roadway departure.
11) Potential hazard to workers and road users presented by device itself and during device placement and removal.
12) Geometrics that may increase crash risks (e.g., poor sight distance, sharp curves).
13) Access to/from workspace.
14) Roadway classification.
15) Impacts on project cost and duration.

Provision of Uniformed Law Enforcement Officers

Upon the approval of the Regional Safety Coordinator or Regional Operations Engineer, Uniformed Law Enforcement Officers may be provided as follows:

1) THP Troopers may be used as established by a Memorandum of Agreement (MOA) between TDOT and TDOS. When a Project Supervisor determines the need for a THP Trooper in a work zone, they will submit the State Trooper Request form* to the Regional Safety Coordinator or Regional Operations Engineer, who will make the request to the THP Sergeant who schedules each THP Trooper. The date, time, location, and type of work on the TDOT project must be conveyed to the Sergeant. All requests to provide the THP should be received at least forty-eight (48) hours in advance of the requested time of service. It is the responsibility of the on-site TDOT Inspector to meet with the officer upon arrival to obtain information for documenting the officer's work hours and for providing information to the officer regarding the work to be performed.

   When the THP is scheduled to work and the work is canceled, or the schedule is changed, the contractor is responsible for notifying the THP and the Project Engineer at least two (2) hours prior to the scheduled time of work. The Project Engineer should immediately notify the Regional Safety Coordinator or Regional Operations Engineer.

2) When THP Troopers are not available, or the Regional Safety Coordinator or Regional Operations Engineer determines that the project would benefit from the use of County or Municipal Police, a Uniformed Police Officer is available through the use of the Non-Bid Item 712-08.01. This item is added to the contract by

contacting the Headquarters Finance Division. The Uniformed Police Officer shall be provided in accordance with the Standard Specifications.

Compensation

THP Troopers: In accordance with the MOA, THP Troopers shall only be paid for the actual hours of service provided to TDOT; therefore, Troopers shall not be paid for time driving to and from the project site. Time charges are calculated from the time of arrival at the work site to the time of departure from the work site. If work is discontinued for weather or other unforeseen reasons, Troopers may elect to stop work and receive payment for the hours worked or continue to monitor/patrol the project until total of (2) hours for the shift have been accumulated. It is imperative that the project inspector accurately document the Trooper's hours. This documentation will be used by the Regional Safety Coordinator or Regional Operations Engineer to verify invoices received from the Department of Safety.

THP Troopers arriving at the work site without being notified of cancellation or schedule changes shall be allowed to monitor/patrol the project for a maximum of (2) hours. Additionally, the contractor shall be charged liquidated damages equaling the THP pay rate for the hours of service, up to a maximum of two (2) hours of work.

Uniformed Police Officer: Uniformed Police Officers shall be provided by the contractor and compensation made by the Department meeting 712.09. No compensation will be made for drive time.

Required Documentation

The attached form shall be used to document the THP Trooper's hours and shall be submitted weekly to the Regional Safety Coordinator or Regional Operations Engineer with a copy placed in the project files.

When Uniformed Police officers are used, the hours worked shall be documented in SiteManager. The construction inspector shall note the beginning and ending time of work; total hours worked, and type of work done by the Uniformed Police Officer.

Officer Training Requirements

All Uniformed Law Enforcement Officers shall have POST certified training and shall have an additional 4 hours of FHWA approved work zone training. Copies of each officer's record of training shall be provided to the District Supervisor and placed in the project file.

All Uniformed Law Enforcement Officers working on TDOT projects shall have training from a Peace Officer Standards and Training (POST) certified police training academy in the State of Tennessee. These academies are as follows:

a. Tennessee Law Enforcement Training Academy (3025 Lebanon Rd., Nashville, TN 37214-2217)
b. Tennessee Department of Safety THP Training Academy (275 Stewarts Ferry Pike, Nashville, TN 38124)
c. Blount Co. Sheriff's Office Law Enforcement Training Academy (940 E. Lamar Alexander Pkwy., Maryville, TN 37804)
d. Chattanooga Police Department Training Academy (3200 Amnicola Hwy., Chattanooga, TN 37406)

e. Cleveland State Community College Police Training Academy (P.O. Box 3570, Cleveland, TN 37329-3570)
f. Knox Co. Sheriff's Office Regional Training Academy (4900 Maloneyville Rd., Knoxville, TN 37921)
g. Knoxville Police Department Training Academy (220 Carrick St., Suite 202, Knoxville, TN 37921)
h. Memphis Police Academy (4371 O.K. Roberson Rd., Memphis, TN 38128)
i. Metro Nashville Police Department Training Department (2715 Tucker Rd., Nashville, TN 37218)
j. Shelby Co. Sheriff's Office Training Academy (993 Dovecrest, Memphis, TN 38134)
k. Walter State Community College Regional Law Enforcement Academy (215 North College St., Greenville, TN 37743)

The course currently approved is "Safe and Effective Use of Law Enforcement personnel in Work Zones" from the FHWA. This course is subject to change periodically to reflect changes in the industry and State practices. Record of this training shall be submitted to the District Supervisor for inclusion in the project files.

LINK TO FORMS:

State Trooper Hours
State Trooper Request

CIRCULAR LETTER

SECTION: **712.07 MAINTENANCE**
NUMBER: **712.07-01**
SUBJECT: **MANUAL ON UNIFORM TRAFFIC CONTROL DEVICES AND CHECKLIST FOR TRAFFIC CONTROL DEVICES**
DATE: **OCTOBER 2. 2015**

All construction warning signs are to be placed in accordance with the Manual on Uniform Traffic Control Devices for Highway Construction and Maintenance Operations.

Construction signs should be erected no closer than 50 feet from an existing sign. Construction signs may be moved plus or minus 100 feet from the Plans location in order to avoid conflicts with existing signs, driveways and side streets. The Regional Traffic Engineer should be contacted if these criteria cannot be met.

At the beginning of work on a project, the construction signs and other traffic control devices are to be placed in accordance with the MUTCD and, thereafter, properly maintained and changed as conditions on the project change.

To direct traffic through construction projects safely and expeditiously, it is imperative that adequate and proper signing be maintained for the full duration of the project. Such maintenance includes the cleaning, repositioning, temporary covering, removing of foliage or other needs as warranted. It should be noted that the MUTCD illustrates minimum desirable standards for normal situations. Additional protection must be provided when special complexities and hazards exist.

To be effective, signing must be credulous. To maintain creditability the signing must convey to the motorist exactly what can be expected on the road ahead. This cannot be accomplished with contradictory or improper signing. Signs should be removed or covered when they are not applicable. If a driver observes a sign several times such as "Right Lane Closed" or "Flagmen Ahead", but as he proceeds he finds the situation conveyed by the message to be nonexistent, he will be much more apt to disregard it in the future. In addition, when a series of signs encroach into the area of another series of signs, only the signs conveying the appropriate message should be displayed. For example, if a series of lane closure signs encroach into the advance warning signs, the advance warning signs should be covered or removed until their need is warranted again.

It is important that the responsibility for inspecting the signing be clearly defined. This responsibility may be assigned to one individual on a region wide basis or on a project basis by the designation of a staff member by the Project Engineer.

Signing should be inspected at least once a week or more often if conditions warrant. Inspections should be made periodically during hours of darkness.

MUTCD CHECKLIST: WORK ZONE TRAFFIC CONTROL INSPECTION FORM

CIRCULAR LETTER

SECTION: **712.09 METHOD OF PAYMENT**
NUMBER: **712.09-01**
SUBJECT: **PAYMENT FOR PORTABLE BARRIER RAIL**
DATE: **MARCH 1, 2024**

There has been confusion and inconsistency, from one region to another, regarding payment for the movement of portable barrier rail.

This letter is being issued in order to promote more uniformity throughout the state. The Standard Specifications seem quite clear on the matter, but it's not that simple in the field. The Specs declare that there will be only one payment per site. Each side of a median divided road and each bridge on a project is a separate site. Generally, the thinking is that moving the barrier across the roadway is not another site, thus one payment. But, when the contractor has to pick up the rail, put it on a low boy and move it to another location, then this constitutes another site.

The Contractor has the option of creating a traffic control plan and a plan for construction phasing. If these plans are approved by the Team Lead, the contractor is obliged to follow this plan unless he is instructed to do differently at some juncture by the Team Lead. If the Team Lead directs the contractor to load up and move to another site as mentioned before, that is, not per his approved construction phasing plan or traffic control plan, then the contractor is entitled to payment. The Team Lead is cautioned to avoid moving median barrier rail unless there is a real need because there is a cost involved.

Payment amount for relocations due to safety of work zone or traffic, as established in the traffic control plans or as directed by the Team Lead, laterally up to 10 ft., shall be paid at ten percent (10%) of the interconnected portable barrier bid amount unless a separate item is in the proposal.

Judgments will still have to be made in the field, but this may help clarify some of these decisions.

CIRCULAR LETTER

SECTION: **713.04 CONSTRUCTION METHODS AND REQUIREMENTS**
NUMBER: **713.04-01**
SUBJECT: **ERECTION OF PERMANENT SIGNS**
DATE: **JANUARY 1, 2010**

Desirable lateral and vertical clearances are indicated in Section 2A.16 Standardization of Location of the MUTCD (2009 Edition).

Circumstances at some locations prohibit strict compliance with MUTCD. In those situations the signs should be located to maximize both visibility and safety.

CIRCULAR LETTER

SECTION: **1230 EQUAL EMPLOYMENT OPPORTUNITY**
NUMBER: **1230-01**
SUBJECT: **ON-THE-JOB TRAINING PROGRAM REQUIREMENTS**
DATE: **MAY 1, 2009**

All Prime Contractors holding contracts on projects with Federal-Aid in excess of $10,000, shall as part of their Equal Employment Opportunity requirements, be required to have an On-the-Job Training Program. The contractor's individual programs shall be submitted to the Tennessee Department of Transportation's OJT Program Coordinator for approval. The Prime Contractor may adopt the program as defined in the OJT Desk Reference, prepared by the TDOT Civil Rights Office, or they may submit an individualized program that at a minimum must include the requirements of the OJT Desk Reference. The contractor's approved program will be in effect until he/she submits revisions for approval or until there are changes in the Federal Regulations.

The Prime Contractor shall submit, for each individual project, an "On-the-Job Training – Initial Training Schedule" form (Attachment 1) to the OJT Program Coordinator prior to the Pre-Construction Conference. This form lists the Classification and Number of Trainees that the contractor intends to employ on the project. The contractor shall make an effort to employ trainees on each project; however, in the event that the number of trainees will be zero, the contractor shall provide adequate documentation on Attachment 1 to justify the absence of trainees on the project.

The Prime Contractor will not be allowed to commence construction until an "On-the-Job Training – Initial Training Schedule" form (Attachment 1) has been approved by the OJT Program Coordinator. Failure of the contractor to provide an approved training program shall not be considered "As a condition not under the control of the contractor" in regards to Contract Time.

The OJT Program Coordinator will maintain a database of approved OJT programs. He/she will forward a copy of each approved "On-the-Job Training – Initial Training Schedule" form to the Contractor and Project Supervisor for inclusion in the project files. By approving this form, the OJT Program Coordinator is affirming that the Prime Contractor has an approved OJT Program on file with the OJT Program Office.

On-the-Job Training – Initial Training Schedule

CIRCULAR LETTER

SECTION: **1240 TRAINING PROGRAM**
NUMBER: **1240-01**
SUBJECT: **TRAINING PROGRAM REQUIREMENTS**
DATE: **MAY 1, 2009**

The following outlines the procedures and documentation necessary to implement the training program as noted in Special Provision 1240.

PROCEDURES TO BE FOLLOWED RELATIVE TO TRAINING PROGRAM REQUIREMENTS

1. TRAINING PROGRAM

The Contractor shall use the Tennessee Department of Transportation On-The-Job Training Program Desk Reference. The TDOT On-The-Job Training Program Desk Reference is the approved training plan by the Tennessee Department of Transportation and Federal Highway Administration.

The contractor shall not be permitted to commence construction without an approved training program**.** Failure of the contractor to provide an approved training program shall not be considered "As a condition not under the control of the contractor" in regards to Contract Time.

2. PRE-CONSTRUCTION CONFERENCE

It is essential that the Affirmative Action Program Office (AAPO) be advised of the date, time and location of the pre-construction conference in order that he/she may have a representative present.

The contractor should be thoroughly familiarized with the administrative procedures of this program and the importance of prompt reporting should be stressed.

3. CLASSIFICATION APPROVAL

Prior to the pre-construction conference, the contractor shall submit to the AAPO, the "On-The-Job Training – Initial Training Schedule" form (Attachment 1) for at least the minimum number of training hours required by the contract. The trainees may consist of new hires or trainees presently enrolled in the training program and transferring to the project or a combination of the two. However, if a trainee is in the training program and is transferring to the project, approval from AAPO is required before the trainee can begin.

Upon approval of the "On-The-Job Training – Initial Training Schedule" form by the OJT Program Coordinator a copy of this approved form will be forwarded to the Contractor and the Project Supervisor. By approving this form, the OJT Program Coordinator is affirming that the Contractor has an approved OJT Program on file with the OJT Program Office.

The Project Supervisor shall not permit the contractor to start work on the project prior to receipt of an approved training plan.

If urgency exists for the construction to commence, the AAPO or his/her representative may give verbal approval and follow with the necessary written formal approval.

4. ENROLLMENT AND TRANSFER

Before a trainee is employed on the project the contractor shall submit an ”On-The-Job Training Enrollment Form" (Attachment 2 - herein after referred to as the enrollment form) to the AAPO. The AAPO will forward approved copies of the enrollment form to the Contractor and the Project Supervisor.

Trainees, for which payment will be made, may not be shown on the contractor's payroll unless the AAPO's files contain an approved ”On-The-Job Training Initial Training Schedule” in the proper classification and an enrollment form for the trainee approved prior to the trainees employment on the project. A contractor employing an individual as a trainee without proper approval is in violation of labor laws.

Any number of trainees, for which payment will not be made, may be employed on the project in any classification provided the AAPO’s files contain an enrollment form approving the trainees prior to their employment on the project. In this case the enrollment form will be noted to the effect that the trainee is not filling a training slot and no payment is requested.

The contractor may, at any time during the progress of the project, request changes in training classifications or additional trainees for payment. The same procedures will be followed in processing these requests as outlined above. In the case of requests for additional trainees for payment an approved Construction Change setting up additional training slots will be required as well as the AAPO’s approval before the additional trainees are employed on the project.

5. EMPLOYMENT

Normally a trainee should be employed on the project within two weeks after the type work in which he/ she is to be trained has started. If the contractor has not employed a trainee in the classification he/ she has requested by the time approximately 15 percent of that type work has been performed, the Contractor shall advise the AAPO, in writing, why the trainee has not been furnished. Failure to receive an acceptable explanation from the contractor may be cause to withhold progress payments.

6. TERMINATION OF TRAINING

When the trainee terminates training on the project for any reason-----completes training, quits, is fired, transfers, etc.--- the OJT Program Coordinator should receive a letter of termination within one week of separation. This letter must contain Trainee’s Name, Address, Phone Number, TDOT Contract Number, Project County, Hours Completed, Classification and reason for termination.

7. DOCUMENTATION OF TRAINING TIME

a. Contractor's Payrolls

When a trainee appears on the payroll for the first time the AAPO should check his/ her files to assure that the training classification is approved and that he/ she has an enrollment form for the

trainee approved on or before his/ her first date of employment, otherwise, the payroll should be returned for correction. A log should be kept of the training hours for payment as taken from the payroll. The rate of pay the trainee receives should be at least the minimum required by the Special Provision Regarding Training Program Requirements.

b. OJT Weekly Progress Report (Attachment 3)
This report must be signed by the Contractor's Supervisor and trainee with attached payroll and submitted to the AAPO. This report will be used as the primary documentation for payment of Trainees. However, the hours shown on this report must be in agreement with the total hours shown on the accumulated payrolls.

8. PAYMENT

No payment for training hours will be made until the trainee has terminated training on the project and the AAPO has received and approved a letter of completion and "OJT Request for Payment" (Attachment 4). Upon approval by the OJT Program Coordinator of the Request for Payment a "Memo to Pay" or "Memo of No Pay" and supporting documentation will be sent to the Project Supervisor. Payment shall not be made without approval from the TDOT OJT Program Coordinator. In addition, the Final Estimate will not be paid without a "Memo to Pay" or "Memo of No Pay" from the TDOT OJT Program Coordinator. All payments shall be made under Item 109-10.01, Trainee, at the unit price of $0.80 per hour for each hour of approved training whether or not the trainee completes the approved training program.

However, no payment shall be made to the contractor if either the failure to provide the required training or the failure to hire the trainee as a journeyman is caused by the contractor and a lack of good faith on the part of the contractor in meeting the requirements of the training Special Provision.

The contractor may elect to graduate the trainee before completion of the required training hours and receive payment for the total number of hours required by the applicable training classification provided that the total of the hours trained and the hours the trainee has been employed as a journeyman equals or exceeds the required training hours.

On-The-Job Training – Initial Training Schedule

TDOT Contract No.: _____

TDOT Project No.: _____

Reference No.: _____

County: _____

Prime Contractor: _____

Address: _____

Phone No.: _____

Contact Name: _____

Classification	Number of Trainees	Required Hours	Projected Start Date of Trainees

Remarks/Justification:

Submitted by:

Name: _____ Title: _____

Signature: _____ Date: _____

Approved: _____ Date: _____

On-The-Job Training Enrollment Form

Prime Contractor _____

TDOT Contract No _____ TDOT Project No _____

Reference No _____ County _____

Trainee Name _____

Address _____

_____

Phone No _____

Gender M F (circle one)

Race __ Asian/Pacific Islander __Black __Hispanic __Native American __White __ Other

Trainee Classification _____ Number of Required Hours _____

Enrollment Date _____

Prime Contractor's Project Manager _____

Wages Starting _____

1st Quarter Training Complete _____

2nd Quarter Training Complete _____

3rd Quarter Training Complete _____

Completed Training _____

Trainee Signature _____ Date _____

Employer Signature _____ Date _____

OJT Program Coordinator Signature _____ Date _____

FOR CONSTRUCTION FIELD OFFICE USE ONLY

☐ The trainee has reported to work on this project

OJT Weekly Progress Report

(attach payroll records to report)

Trainee Name: _____ Contractor: _____

Classification: _____ TDOT Contract No: _____

Enrollment Date: _____ County: _____

Wage: _____ Contact: _____

Week Ending: _____ Phone No: _____

Training Phase*	Total Hours This Week	Total Accumulated Hours

*Familiarization, Safety, Maintenance, Clean-Up, Traffic Control, Equipment Operations, etc…

Trainee's Supervisor Signature: _____Date: _____

Trainee Signature: _____ Date: _____

Send or Fax to: OJT Program Coordinator
Civil Rights Office
505 Deaderick St. Ste. 1800
James K. Polk Building
Nashville, TN 37243
Fax – 615.741.3169

OJT REQUEST FOR PAYMENT

Prime Contractor: _____

Address: _____

Contact Person: _____

TDOT Contract No.: _____ TDOT Project No.: _____

Reference No.: _____ County: _____

Trainee Name: _____

Address: _____

Phone No.: _____

Trainee Classification: _____ Number of Required Hours: _____

Enrollment Date: _____ Number of Hours Completed: _____

Starting Wage: _____ Ending Wage: _____

Contractor Signature: _____ Date: _____

Approved for payment: _____ Amount to pay: _____

Special comments: _____

OJT Program Coordinator Signature: _____

Date: _____

CIRCULAR LETTER

SECTION: **1247 DBE SUBCONTRACTING**
NUMBER: **1247-01**
SUBJECT: **MONITORING OF PROJECTS WITH DBE SUBCONTRACTS**
DATE: **AUGUST 18, 2023**

A. Contract Award

At the time of contract award with projects containing SP1247, the contractor has made commitments to subcontract certain portions of the contract to DBE contractors. These commitments are contract requirements and are to be adhered to unless revised with approval of the Civil Rights Division-Small Business Development Program (CRD-SBDP) Director.

B. Pre-Construction Conference

At the Pre-Construction Conference, the contractor shall identify all DBE subcontractors indicating approximate dates for their appearance on the project. The Engineer should review the contract information to verify the actual work to be performed by the DBE contractors and review any lease agreements allowed as part of the DBE commitment. This information should be verified against the DBE utilization memo. The DBE utilization memo is available on the respective letting page.

C. Construction

After the contract has been awarded and prior to commencing Work, the Contractor shall submit the subcontract forms and copies of all binding subcontracts and purchase orders with DBEs to the Headquarters Construction Division via email at Sub.Contracts@tn.gov. Headquarters Construction Division will send the documents via email to the CRD-SBDP and appropriate Region. It is important that this information be provided so TDOT can accurately report DBE race conscious and race neutral participation to the FHWA. No progress estimates shall be processed until this information is received when the Contract includes SP1247, and a DBE Goal is specified. The subcontracts are to be submitted in such detail as necessary to explicitly show the project personnel what is to be performed by the DBEs. (These DBE subcontract agreements are not to be confused with the TDOT Subcontract Forms that are approved and distributed by the Headquarters Construction Division.) Immediately notify contractor and CRD-SBDP of any discrepancies between these agreements and the DBE utilization memo. Any discrepancies shall be resolved between the Contractor and the CRD- SBDP prior to processing any estimates.

The following are required for each DBE:

1. The Commercially Useful Function (CUF) Checklist shall be completed as described below.
2. Prompt Payment Certification
3. When the project has been completed, the contractor and the DBE must submit Form CC-3 certifying the amount paid to the DBE on all projects where a DBE participated in the work. The final estimate is not to be processed until this form has been received.

All forms submitted to the Engineer shall be retained in the project files.

In addition to review of the forms submitted by the Contractor, the project personnel shall monitor DBE work during the life of the project to ensure the work committed to DBEs is performed as committed. The monitoring shall include the following:

1. Any work committed to DBEs not performed in accordance with submitted subcontract agreements will not be allowed unless the deviation is as provided for in the contract and has been approved by the CRD-SBDP.
2. If work committed to DBEs is found being performed by others, it is to be halted and reported to the CRD-SBDP immediately. It is not to be resumed until instructed by the CRD-SBDP.
3. If a DBE performing on the contract is found to be using the Contractor's forces and/or equipment, this shall be reported to the CRD-SBDP. If found, the work is to be halted until such time as the matter is resolved.

At the discretion of the Engineer, an exception to all of the above will be allowed should an emergency situation develop requiring actions to the contrary for the Public's safety or for environmental compliance. If such an emergency occurs, the Public's safety and environmental compliance is to be ensured first by whatever means appropriate. Thereafter, the occurrence shall be reported to the Engineer and CRD-SBDP for review and disposition.

The Contractor must provide documentation of good cause to terminate and/or substitute a DBE subcontractor on a project with SP1247 included in the Contract. Acceptable reasons for good cause are stated in 49 CFR 26.53(f) and the proper process for terminating a DBE subcontract are also included in this section. Before terminating and/or substituting a DBE subcontractor on a project that includes SP1247 in the Contract, the Contractor must give notice in writing to the DBE subcontractor, with a copy to the CRD-SBDP, of its intent to request to terminate and/or substitute including the reason for the request.

The Contractor must then give the DBE 5 days to respond to the Contractor's notice. The DBE shall then advise the CRD-SBDP and the Contractor of the reasons, if any, why it objects to the proposed termination of its subcontract and why the CRD-SBDP should not approve the Contractor's action. If required in a particular case as a matter of public necessity (e.g., safety), the CRD-SBDP may provide a response period shorter than 5 days. The Contractor shall document their efforts to have another DBE perform the item or to have a DBE perform other items to replace the original DBE commitment amounts. In the event the Contractor is not able to find replacement DBE work, the Contractor must provide the CRD-SBDP documentation clearly evidencing good faith efforts. Any request for substitution of a DBE subcontractor shall be made to the Department and approved by the CRD-SBDP.

<u>Transportation or Hauling of Materials</u>

Leases- A DBE must own and operate a minimum of 1 truck. A DBE may “lease to own” a truck from licensed truck dealership/leasing agency for consideration as “ownership” if there is a finance (capital) lease which meets at least one of the following criteria:

1. Ownership of the asset is transferred to the lessee at the end of the lease term.
2. The lease contains a bargain purchase option to buy the equipment at less than fair market value.
3. The lease term equals or exceeds 75% of the asset's estimated useful life.
4. The present value of the lease payments equals or exceeds 90% of the total original cost of the equipment.

(For additional lease to own information refer to Statement of Financial Accounting Standards No. 13 (FAS 13).

SP1247 states the following "The DBE who leases trucks from a non-DBE is entitled to the total value of transportation services provided by non-DBE lessees not to exceed the value of transportation services provided by DBE-owned trucks on the contract." The following example is used to clarify this provision:

> *DBE Firm X uses two of its own trucks on a contract. It leases two trucks from DBE Firm Y and six trucks from non-DBE Firm Z. DBE credit would be awarded for the total value of transportation services provided by Firm X and Firm Y, and may also be awarded for the total value of transportation services provided by four of the six trucks provided by Firm Z. In all, full credit would be allowed for the participation of eight trucks. With respect to the other two trucks provided by Firm Z, DBE credit could be awarded only for the fees or commissions, and driver if provided by the DBE, pertaining to those trucks Firm X receives as a result of the lease with Firm Z.*

The Contractor/DBE Hauler is required to complete the "TDOT DBE Truck List" to identify which trucks will be used towards DBE goal participation. If the DBE hauler leases trucks or subcontracts hauling from a non-DBE, they must also complete the "TDOT DBE Trucking Credit Worksheet" to accurately document eligible DBE participation. This information should be submitted to the CRD-SBDP and Engineer.

Commercially Useful Function (CUF) Checklist

The CUF Checklist shall be completed for ALL DBEs on ALL Federally Funded projects regardless if they are being used to meet the DBE project goal.

The CUF Checklist should be completed for ALL DBEs on ALL State projects.

A DBE performs a commercially useful function when it is responsible for execution of the work of the contract and is carrying out its responsibilities of actually performing, managing, and supervising the work involved. To perform a commercially useful function, the DBE must also be responsible with respect to materials and supplies used on the contract, for negotiating price, determining quality and quantity, ordering the material, installing (where applicable), and paying for the material itself.

The checklist is designed to be a snapshot of the day to ensure a DBE is an independent firm that is in control of day-to-day operations.

If a Prime Contractor or Subcontractor (if 2nd Tier agreement) will be using a DBE Material Supplier/Trucker, then a DBE Material Supplier/Trucker Contract Certification form must be completed and submitted to the CRD-SBDP with the actual Subcontract Agreement and/or purchase order prior to the pre-construction conference.

The Project Inspector will complete the CUF Checklist once a DBE begins work.

The Construction Field Office shall review the checklist to ensure completeness.

For additional information see the CUF Checklist and Guidance.

CIRCULAR LETTER

SECTION: **1247 DISADVANTAGED BUSINESS ENTERPRISE (DBE) SUBCONTRACTING**
NUMBER: **1247-02**
SUBJECT: **CONTRACTOR FAILURE TO COMPLY WITH SPECIAL PROVISION 1247**
DATE: **AUGUST 18, 2023**

At the time of contract award with projects containing Special Provision 1247 (SP1247) with a DBE goal, among many things, the Contractor has made commitments to subcontract a certain percentage of the contract to DBE subcontractors. These commitments are contract requirements and are to be adhered to unless revised with approval of the Civil Rights Division-Small Business Development Program (CRD-SBDP) Director.

Section G of SP1247 states: "If the Contractor fails to comply with Special Provision 1247 and/or 49 CFR Part 26, including failure to obtain goal where a good faith effort was not accepted, the Department shall take one or a combination of the following steps:

1. Withhold from the Contractor the monetary value of the unattained goal percentage plus an additional 10% for engineering costs, not as penalty but as liquidated damages.
2. Suspend the Contractor from participation in Department bid lettings pursuant to rules promulgated by the Department.
3. For repeated failures to comply, debar the Contractor pursuant to rules promulgated by the Department.
4. Invoke other remedies available by law and/or in the contract.
5. Invoke any other lawful remedy agreed upon by the Commissioner and the Contractor in writing."

Actions that would not comply with SP1247 would include but are not limited to:

1. Failure to include the required non-discriminatory statement in all subcontracts.
2. Failure to fulfill the DBE goal on a project or provide a good faith effort.
3. Failure to provide notification and receive approval for the removal and/or substitution of a DBE subcontractor previously submitted at the time of the bid.
4. Failure to get approval for 2nd and 3rd tier subcontractors.
5. Failure to notify the Department of the arrival of the DBE subcontractor at an onsite or offsite location to assure the completion the CUF form.
6. Failure to assure that the DBE subcontractor/supplier/hauler is performing a commercially useful function.
7. Contractor directly paying for the DBE's materials.
8. Failure to receive prior approval from the CRD-SBDO for joint checks.
9. Contractor has a brokering relationship with the DBE supplier.
10. Failure to submit CC3 forms in a timely manner.

11. Failure to make and/or submit prompt payment information in a timely manner.
12. Failure to submit proper subcontractor documentation including the actual subcontracts between the contractor and the DBE subcontractor to Headquarters Construction Division.
13. Failure to submit DBE Truck Lists, Truck Credit Worksheets, Lease Agreements and assure DBE haulers are using owned/properly leased trucks.
14. Attempting to participate in the DBE program based on false, fraudulent, or deceitful statements or representations or under circumstances indicating a serious lack of business integrity or honesty.
15. Egregious, conspicuously bad, and flagrant actions resulting in non-compliance with SP1247 and/or 49 CFR Part 26.

Should the Contractor fail to reach the Contract goal or fail to comply with SP1247 the Region will present the facts of the issue to Headquarters Construction and the CRD-SBO. As a minimum, the CUF checklist, Utilization Memo, Prompt Payment Summary, and related correspondence should be submitted for review of compliance. A determination will be made jointly by Headquarters Construction and the CRD-SBO as to the specific corrective action needed.

The Contractor shall provide a written explanation as to why they did not comply with SP1247.

Figure 1, "Liquidated Damages or Sanctions for SP1247 Non-Compliance", will be used as guidance in the determination of the range of liquidated damages/sanctions for SP1247 noncompliance.

The Department will determine the amount of the unattained goal percentage and will assess the amount of liquidated damages based on that value.

Item No. 107-06.01 Liquidated Damages (Failure To Comply w/SP1247) Dollar

<u>FHWA</u>

In addition to any action imposed by the Department, the Federal Highway Administration (FHWA) can take independent action based upon noncompliance with SP1247 and/or 49 CFR Part 26. If FHWA takes action, then the Department shall assess liquidated damages to the Contractor of 110% of the unattained goal.

FHWA shall be notified in every instance the Department takes action due to a failure to comply with SP1247 and/or 49 CFR Part 26.

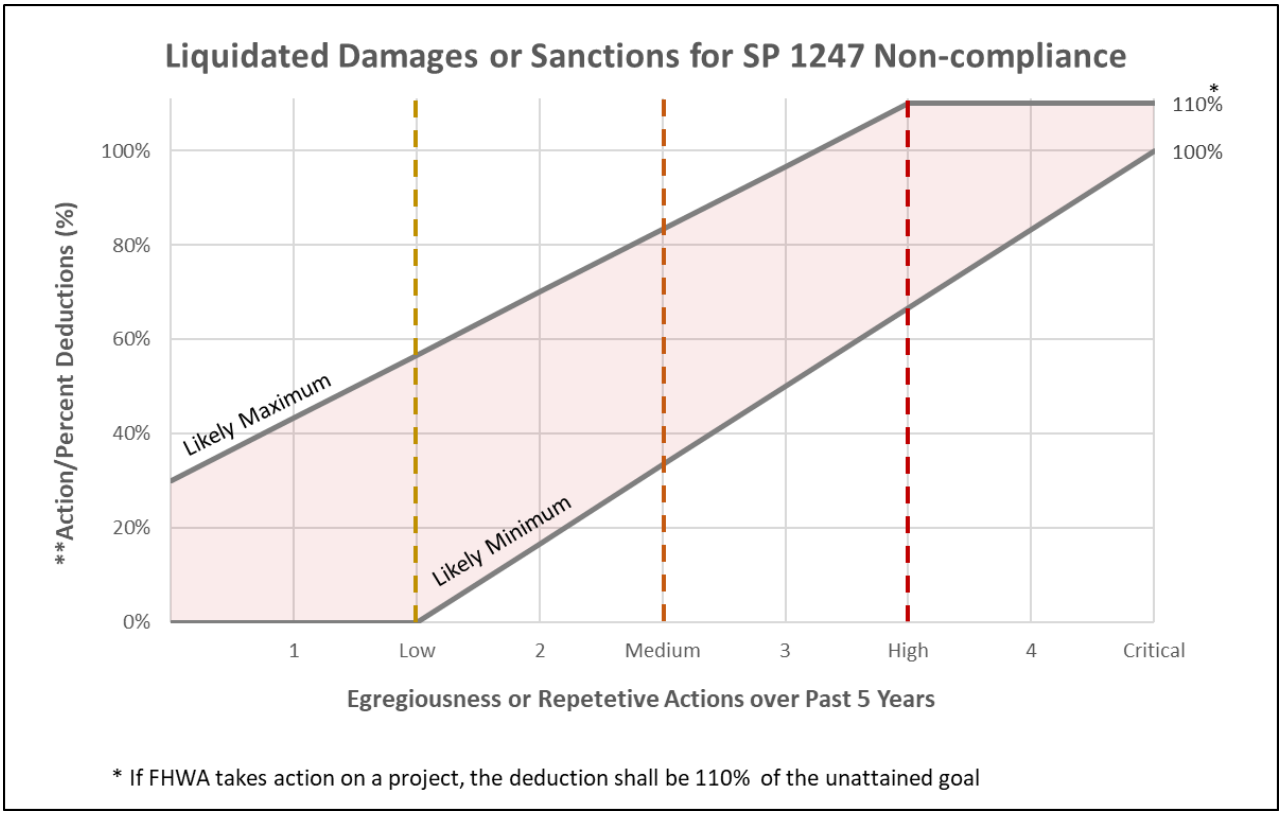

Figure 1- Liquidated Damages or Sanctions for SP1247 Non-Compliance

CIRCULAR LETTER

SECTION: **1273 CONTRACT PROVISIONS – FEDERAL-AID CONTRACTS (AND/OR 1280 – STATE FUNDED CONTRACTS)**
NUMBER: **1273-01**
SUBJECT: **PROJECT SITE POSTERBOARD**
DATE: **AUGUST 19, 2019**

The following posters and notices are to be posted on all construction projects by the contractor. This includes resurfacing projects and projects of short duration. For moving operations, or projects where there is not a suitable location for a stationary posterboard, contractors may use magnetic poster boards/notices on the side of trucks wherever equipment is stored or where individuals congregate, to meet the posting requirements.

Certificate of Non-Segregated Facilities

Complaint Procedures

Federal Posters/Notices:

1. Equal Employment Opportunity is the Law Poster. (Form EEOC-P/E-1, required by FHWA 1273.

2. Your Rights Under USERRA (The Uniformed Services Employment and Reemployment Rights Act). (Use poster or text from www.dol.gov/vets website, required by 20 CFR Part 1002).

3. NOTICE Federal Aid Projects – False Statements. (Form FHWA 1022, required by 18 CFR 1020 and 23 CFR 635.119).

   Note: State Highway Department Representative should be inserted as:
   Commissioner
   Tennessee Department of Transportation
   Suite 700, James K. Polk Building
   Nashville, TN 37243-0326

   FHWA Representative should be inserted as:
   Division Administrator
   Federal Highway Administration
   404 BNA Drive
   Building 200, Suite 508
   Nashville, TN 37217

4. Employees Rights Under the Fair Labor Standards Act (FLSA) Minimum Wage Poster. (Form WH 1088 and WH 1313, required by 29 CFR 5.5(a)(1). Note actual wage rates must be entered on WH 1313

5. Employee Rights for Workers with Disabilities Paid at Special Minimum Wages (Form WH-1284, required by CFR 525.14)

6. Contractor's EEO Policy Statement and Letter Appointing the Company's EEO Officer for the Project. (Statement must be developed by contractor per requirements of 41 CFR 60-741.44)

7. Job Safety and Health IT'S THE LAW Poster. (OSHA Form 3165, required by 29 CFR 1903.2(a)(1) through FHWA-1273.

8. Employee Polygraph Protection Act Notice. (Form WH 1462, required by 29 CFR 801.6).

9. Employee Rights and Responsibilities Under the Family and Medical Leave Act. (Form WHD 1420, required by 29 CFR 825.300 and 825.400 for employers of more than 50 people.

10. Employee Rights Under the Davis-Bacon Act. (Form WH 1321, required by 29 CFR 5.5 (a)(3) and FHWA-1273).

11. Prevailing Wage Rates. (Required by WH 1321).

12. 24 Hour Emergency Numbers. (Contractor must post numbers to call in the event of an emergency, required by 29 CFR 1926.50(f) through FHWA-1273

13. Pay Transparency Nondiscrimination Provision. (41 CFR Part 60-1.35)

14. Notification of Employee Rights Under Federal Labor Laws Poster. (29 CFR Part 471)

State Posters/Notices:

1. Wage Regulation/Child Labor Poster. Tennessee Code paragraph 50-5-111. (Applies to employers of minors subject to the child labor regulations).

2. Tennessee Law Prohibits Discrimination in Employment. Tennessee Code paragraph 4-21-904.

3. Tennessee Worker's Compensation Insurance Poster. Tennessee Code paragraph 50-6-407.

4. Tennessee Unemployment Insurance Poster for Employees. Tennessee Code paragraph 50-7-304.

5. Payday Notice. Wage Regulation Act Tennessee Code 50-2-103(d).

6. TOSHA Safety and Health Poster. Tennessee Code paragraph 50-3-101. Posting of the Federal Poster meets requirement.

7. Prompt Payment. Tennessee Department of Transportation. Standard Specifications, Section 109.02.

The posters/notices listed above may be obtained at:

https://www.dol.gov/general/topics/posters

https://www.tn.gov/workforce/general-resources/major-publications0/major-publications-redirect/posters-redirect/required-posters.html

Environmental Permits:

The following items must be posted if the project is covered under the applicable environmental permit(s):

1. Notice of Coverage (NOC) for TDEC Construction General Permit.
2. Any other applicable environmental permits for the project site where permit conditions require posting a permit copy at the project site.
3. Location of SWPPP along with an individual contact name, company name, phone number and email address (if applicable).

CIRCULAR LETTER

SECTION: **1273 CONTRACT PROVISIONS – FEDERAL-AID CONTRACTS (1280-STATE FUNDED PROJECTS)**
NUMBER: **1273-02**
SUBJECT: **CONTRACTOR'S PAYROLLS**
DATE: **January 6, 2020**

In accordance with Contract Special Provisions 1273 and 1280 and the Standard Specifications Subsection 107.20, the Contractor and all subcontractors must submit each week in which any contract work is performed, one (1) copy of the weekly payroll with a signed "Statement of Compliance" to the Operations District Supervisor. THE PRIME CONTRACTOR IS RESPONSIBLE FOR THE SUBMISSION OF COPIES OF PAYROLLS FOR ALL SUBCONTRACTORS.

The prime Contractor must submit payrolls electronically. The electronic copy shall be a scanned copy of the original weekly payroll with a Statement of Compliance. Originals shall be maintained by the contractor and subcontractors during the work and for at least three (3) years after issuance of the Completion Notice and shall make them available for review upon request.

The required weekly payroll information may be on any form desired. Optional Form WH–347 is available for this purpose from the Wage and Hour Division Web site at https://www.dol.gov/whd/programs/dbra/wh347.htm or its successor site. If Form WH-347 is not used, the payroll shall contain:

1. Payroll number, including begin/end dates.
2. Each employee's full name and individually identifying number (such as the last 4 digits of SSN).
3. Each employee's classification.
4. Each employee's hourly wage rate (including fringe benefits) and hourly overtime pay rate.
5. Daily and Weekly number of regular hours worked in each of the employee's classification including number of overtime hours worked.
6. Itemized deductions for each employee.
7. Net wages paid to each employee.

Each payroll submitted shall be accompanied by a "Statement of Compliance," signed by the contractor or subcontractor or the agent who pays or supervises the payment of the persons employed under the contract. Signing the "Statement of Compliance," certifies the following:

(i) That the payroll for the payroll period contains the information required to be provided under §5.5 (a)(3)(ii) of Regulations, 29 CFR part 5, the appropriate information is being maintained under §5.5 (a)(3)(i) of Regulations, 29CFR part 5, and that such information is correct and complete;

(ii) That each laborer or mechanic (including each helper, apprentice, and trainee) employed on the contract during the payroll period has been paid the full weekly wages earned, without rebate, either directly or indirectly, and that no deductions have been made either directly or indirectly from the full wages earned, other than permissible deductions as set forth in Regulations, 29 CFR part 3;

(iii) That each laborer or mechanic has been paid not less than the applicable wage rates and fringe benefits or cash equivalents for the classification of work performed, as specified in the applicable wage determination incorporated into the contract.

The first payroll submitted by the prime contractor and each subcontractor shall be thoroughly checked to ensure the payroll is certified (contains Statement of Compliance), contains the information required (as detailed above), all laborers and mechanics, are paid, at a minimum, the rate specified in the contract for the associated classification and overtime rates are correct. It is not necessary to compare daily DWR workforce entries to the payrolls. On a monthly basis, a randomly selected contractor's or subcontractor's payroll should be checked to assure the payroll is correct and complete. On Federally funded projects, the monthly payroll checked should be that of the contractor or subcontractor of the employee interviewed per Circular Letter1273-03 to assure continued conformance.

Thorough payroll reviews shall be made when the Operations District Supervisor has any reason to believe that any contractor or subcontractor employee is not being paid the minimum prevailing wage. Any necessary corrections shall be made as stated in Circular Letter 1273-02.01 and shall be requested through the prime contractor.

All certified payrolls must be submitted to the Operations District Supervisor weekly for each week in which any contract work is performed. If all of the certified payrolls are not received in this timeframe, a written notification will be sent to the prime contractor for the late or missing payrolls. The progress payment shall be withheld until all of the necessary certified payrolls have been received for the progress payment. The correspondence for payroll issues will be kept electronically in the payroll file for that month in an issue correspondence folder.

The certified payrolls are to be retained with the project records. The Operations District Supervisor (or designee) will create a sub folder labeled with the payroll ending date(Ex: Year-Month-Day)(19-11-26) under the File Management folder labeled "Payrolls" and save all the payrolls and email sent by the prime contractor for each ending date. It will not be necessary to maintain a printed copy in the project records

For electronic submittals, the prime contractor shall follow the formatting below:

1. Send one email per week. The TDOT Field Office shall file the email electronically to ensure that the date and time of receipt is recorded.
2. Include in the email the individual payrolls for the prime contractor and all subcontractors (DO NOT send one pdf containing all payrolls)
3. The subject line of the email may read: CNxxx, Payrolls, Week ending: 19-11-26
4. Individual files shall be designated as: CNxxx_PrimeContractorName_Endingdate.pdf, CNxxx_SubContractorName_Endingdate.pdf (Ex.:CNA123_JohnDoeContracting_19-11-26.pdf)
5. In the email text, the prime contractor shall list all approved subcontractors for the project. This list may grow during construction, as additional subcontractors are added.

6. If during the week being reported, the prime contractor or any individual subcontractor has not performed work, then in the email text next to the listed contractor, the prime contractor shall note "No work performed by (Contractor Name) for the week ending _____. (See Subsection 107.20 of the Standard Specifications.)

The Tennessee Department of Labor and Workforce Development (TDLWD) does not need to receive a copy of the certified payroll, but may be allowed access to review any payroll upon request. Payrolls shall not be made available to public inspection (except as indicated above) by the Operations District Supervisor.

TENNESSEE DEPARTMENT OF LABOR
LABOR STANDARDS STAFF

Christina Tugman	Nashville Inspector	220 French Landing Drive, Suite 2B Nashville TN 37243	615-393-4615
Paula Horne	Chattanooga Inspector	1301 Riverfront Parkway, Suite 202 Chattanooga TN 37402	423-326-5386
Travis Hisel	Cookeville Inspector	444-A Neal Street Cookeville TN 38501	931-217-7314
Lisa Jordan	Knoxville Inspector	2700 Middlebrook Pike, 1st Floor Knoxville TN 37921	865-210-1119
Brian Pettis	Morristown Inspector	215 S. Liberty Hill Rd. Morristown, TN 37813	423-453-0659
Richard Tessier	Dickson Inspector	250 Beasley Dr. Dickson TN 37055	931-581-0307
Michael Pugh	Johnson City Inspector	206 High Point Dr. Johnson City TN 37601	423-223-4452
Orlandos Rutherford	Humboldt Inspector	1481 W. Mullins Street Humboldt TN 38343	731-414-1195
Vivian Moody	Memphis Inspector	3040 Walnut Grove Rd. Memphis TN 38111	901-297-0005

Example 1:

A) The prime/subcontractor's weekly pay period ends on Friday, 9/13/2019.

B) The prime/subcontractor must pay employees within 7 days of weekly pay period end date Friday, 9/13/2019, payment is due on or before Friday, 9/20/2019.

C) Certified Payrolls are due to TDOT within 7 days of payment on Friday 9/20/2019, Certified Payrolls are due on or before Friday, 9/27/2019.

September 2019

Sunday	Monday	Tuesday	Wednesday	Thursday	Friday	Saturday
1	2	3	4	5	6	7
8	9	10	11	12	13 **A**	14
15	16	17	18	19	20 **B**	21
22	23	24	25	26	27 **C**	28
29	30					

Example 2:

D) The prime/subcontractor's weekly pay period ends on Saturday, 9/14/2019

E) The prime/subcontractor pays employees every Tuesday, payment for weekly pay period end date of Saturday, 9/14/2019 occurs on Tuesday, 9/17/2019.

F) Certified Payrolls are due to TDOT within 7 days of payment on Tuesday, 9/17/2019, Certified Payrolls are due on or before Tuesday, 9/24/2019.

September 2019

Sunday	Monday	Tuesday	Wednesday	Thursday	Friday	Saturday
1	2	3	4	5	6	7
8	9	10	11	12	13	14 **D**
15	16	17 **E**	18	19	20	21
22	23	24 **F**	25	26	27	28
29	30					

Example 3:

G) The prime contractor's weekly pay period ends on Friday, 9/13/2019.

H) The prime contractor pays employees every Wednesday, payment for weekly pay period end date of Friday, 9/13/2019 occurs on Wednesday, 9/18/2019.

I) The subcontractor's weekly pay period ends on Wednesday, 9/11/2019, and 9/18/2019 (**H**).

J) The subcontractor pays employees every Monday, so payment for weekly pay period end date of Wednesday, 9/11/2019 occurs on Monday, 9/16/2019.

K) Certified Payroll for subcontractor is due to TDOT within 7 days of payment on Monday, 9/16/2019, Certified Payrolls are due on or before Monday, 9/23/2019.

L) Certified Payrolls for prime contractor are due to TDOT within 7 days of payment on Wednesday, 9/18/2019, Certified Payrolls are due on or before Wednesday, 9/25/2019.

The Prime Contractor may submit prime and sub certified payrolls on 9/25/2019 (L) for prime contractor week ending date 9/13/2019 (G) and subcontractor week ending date 9/16/2019 (H) and be within the timeframes outlined in the Code of Federal Regulations.

If the prime contractor does NOT submit payrolls for subcontractor 9/11/2019 (I) until 9/25/2019 (L), the subcontractor payrolls will be late by two (2) days.

THE PRIME CONTRACTOR IS RESPONSIBLE FOR THE SUBMISSION OF COPIES OF PAYROLLS FOR ALL SUBCONTRACTORS.

September 2019

Sunday	Monday	Tuesday	Wednesday	Thursday	Friday	Saturday
1	2	3	4	5	6	7
8	9	10	11 **I**	12	13 **G**	14
15	16 **J**	17	18 **H**	19	20	21
22	23 **K**	24	25 **L**	26	27	28
29	30					

Example 4:

M) The prime contractor's weekly pay period ends on Friday, 9/27/2019

N) The prime contractor pays employees every Wednesday, payment for weekly pay period end date Friday, 9/27/2019 occurs on Wednesday, 10/2/019.

O) Certified Payrolls are due to TDOT within 7 days of payment on Wednesday, 10/2/2019, Certified Payrolls are due on or before Wednesday, 10/9/2019.

Prime/subcontractor certified payrolls that are due to TDOT on or before the estimate run date must be received before processing the estimate.

September, 2019

Sunday	Monday	Tuesday	Wednesday	Thursday	Friday	Saturday
1	2	3	4	5	6	7
8	9	10	11	12	13	14
15	16	17	18	19	20	21
22	23	24	25	26	27 **M**	28
29	30 **Estimate Cutoff Date**					

October 2019

Sunday	Monday	Tuesday	Wednesday	Thursday	Friday	Saturday
		1	2 **N**	3	4	5
6	7	8	9 **O**	10 **Estimate Run Date**	11	12
13	14	15	16	17	18	19
20	21	22	23	24	25	26
27	28	29	30	31		

CIRCULAR LETTER

SECTION: **1273 CONTRACT PROVISIONS – FEDERAL-AID CONTRACTS**
NUMBER: **1273-02.01**
SUBJECT: **CONTRACTOR'S PAYROLLS - CORRECTIONS**
DATE: **MAY 15, 2024**

When Field Office personnel discovers either through review of contractor or subcontractor certified payrolls, monthly labor interviews and/or labor complaints that incorrect wages are being paid, Field Office personnel are responsible to initiate immediate action to have the certified payrolls corrected. Follow these steps to get the certified payrolls corrected.

(1) Notify the contractor in writing of the infraction giving sufficient time to investigate and correct with documentation of the actions (two weeks).

(2) If the contractor fails to initiate corrective action, notify the contractor in writing of intent to withhold progress estimates until corrections have been made.

(3) If the contractor fails to comply with #2, notify HQ Construction and the Tennessee Department of Labor and Workforce Development for further handling.

In instances where an infraction is alleged but has not been verified by Field Office personnel follow these steps to verify if the certified payrolls are correct or if an infraction has occurred.

(1) Notify the contractor in writing of the alleged infraction giving sufficient time to investigate and correct or explain the action (two weeks).

(2) Field Office personnel should closely monitor circumstances around the alleged infraction from the point of the complaint to determine if a violation is continuing to occur.

(3) If #2 indicates an infraction, the contractor must correct immediately with documentation. If the contractor does not correct, then notify the contractor in writing of the intent to have progress estimates withheld until corrections have been made.

(4) If the contractor fails to comply with #3, notify HQ Construction and Tennessee Department of Labor and Work Force Development for further handling.

(5) If #2 fails to disclose an infraction and/or the complaint is not resolved, the complaint should be sent to HQ Construction and the Tennessee Department of Labor and Workforce Development, for further handling.

NOTE: Procedures also apply to State Funded projects.

CIRCULAR LETTER

SECTION: **1273 CONTRACT PROVISIONS –FEDERAL-AID CONTRACTS (1280-STATE FUNDED PROJECTS)**
NUMBER: **1273-02.02**
SUBJECT: **CONTRACTOR PAYROLLS AASHTOWARE -CIVIL RIGHTS & LABOR**
DATE: **June 5, 2024**

In accordance with Contract Special Provisions **1273, 1280**, and Supplemental Specification Subsection **107.20**, the Contractor and all subcontractors must submit payrolls each week once the applicable contractor has begun to perform work. All payrolls shall be submitted electronically through the website using AASHTOWare Project (AWP) Civil Rights & Labor (CRL) software.

The required weekly payroll must be entered into CRL by the Contractor, subcontractor, Disadvantaged Business Enterprises (DBE), certified Small Business Enterprises (SBE) and DBE or SBE haulers. All subcontractors must forward their payroll to the Contractor to be certified and signed before the Contractor submits the payroll to TDOT in CRL.

Field office personnel shall review payroll status in CRL at least once a week for each contract. Larger contracts may require checking payrolls more frequently. Payrolls should be reviewed and checked for transitions, exceptions, and/or employee mismatches. Under Certified Payroll Status, either approve or reject the payroll accordingly. If a payroll is rejected, there must be an explanation of the issue in the comments field.

Utilize the "Contractor Activity Report CR02" located in Power BI-SiteManager and the "Contractor Payroll Tracking Report" located in AWP to ensure that all payrolls have been submitted once work was performed by each Contractor and/or subcontractor. The "Contractor Payroll Tracking Report" must be generated before paying an estimate for the period to ensure that all payrolls on the contract have been approved and are in good standing.

Payrolls will be expected each week for the Contractor and each subcontractor once they have begun to perform work, including weeks in which there is "No Work Performed", unless the "No Work Until Further Notice" box is checked. . If the Contractor or subcontractor is aware when submitting a payroll that they are about to enter a time frame where they will not be performing any work, they can check the box that will notify office staff there will be "No Work Until Further Notice" for this Contractor or subcontractor. Once a Contractor or subcontractor submits a payroll after the "No Work Until Further Notice" period, payrolls will be required weekly until again notified "No Work Until Further Notice".

All payrolls must be submitted through CRL weekly once any contract work has begun for a contractor. If all of the certified payrolls are not received in this timeframe, a written notification will be sent to the Contractor for the late or missing payrolls. The progress payment shall be withheld until all of the necessary certified payrolls have been received for the progress payment. If the progress payment is withheld for 2 or more subsequent months, then notify Headquarters Construction Division. The correspondence for payroll issues will be kept electronically in the payroll file for that month in an issue correspondence folder.

For TDOT field office staff, further instructions are provided on Job Box under Guides:

Certified Payrolls Quick Reference Guide.pdf (sharepoint.com)

Additional resources may be found on the following:

TDOT Learning Network Class: AASHTOWare Project Civil Rights & Labor Certified Payroll Training for Office Staff.

https://www.tn.gov/tdot/tdot-construction-division/transportation-construction-division-resources/tdot-labor-compliance/certified-payrolls.html

The Tennessee Department of Labor and Workforce Development (TDLWD) does not need to receive a copy of the certified payroll but may be allowed access to review any payroll upon request.

TENNESSEE DEPARTMENT OF LABOR
LABOR STANDARDS STAFF

Christina Tugman	Nashville Inspector	220 French Landing Drive, Suite 2B Nashville TN 37243	615-393-4615
Paula Horne	Chattanooga Inspector	P.O. Box 15615 Chattanooga TN 37415	423-326-5386
Travis Hisel	Cookeville Inspector	PO Box 131 Crossville TN 38557	931-217-7314
John Anderson	Knoxville Inspector	2700 Middlebrook Pike, 1st Floor Knoxville TN 37921	865-310-6998
Brian Pettis	Morristown Inspector	PO Box 601 Dandridge TN 37725	423-453-0659
Richard Tessier	Dickson Inspector	PO Box 150 Clarksville TN 37041	931-581-0307
Michael Pugh	Johnson City Inspector	PO Box 42 Butler TN 37640	423-223-4452
Theresa Lowery	Humboldt Inspector	PO Box 334 Trenton TN 38382-0334	731-845-4168
Patricia Armstrong	Memphis Inspector	3040 Walnut Grove Rd. Memphis TN 38111	901-745-7195

CIRCULAR LETTER

SECTION: **1273 CONTRACT PROVISIONS – FEDERAL-AID CONTRACTS (1280-STATE FUNDED PROJECTS)**
NUMBER: **1273-02.03**
SUBJECT: **CONTRACTOR'S PAYROLLS – LOCAL PROGRAMS**
DATE: **MAY 15, 2024**

In accordance with Contract Special Provisions 1273, 1280 and 107CPLP, the Contractor and all subcontractors must submit each week in which any contract work is performed, one (1) copy of the weekly payroll with a signed "Statement of Compliance" to the Field Office. THE PRIME CONTRACTOR IS RESPONSIBLE FOR THE SUBMISSION OF COPIES OF PAYROLLS FOR ALL SUBCONTRACTORS.

The prime Contractor must submit payrolls electronically. The electronic copy shall be a scanned copy of the original weekly payroll with a Statement of Compliance. Originals shall be maintained by the contractor and subcontractors during the work and for at least three (3) years after issuance of the Completion Notice and shall make them available for review upon request.

The required weekly payroll information may be on any form desired. Optional Form WH–347 is available for this purpose from the Wage and Hour Division Web site at https://www.dol.gov/sites/dolgov/files/whd/legacy/files/wh347.pdf or its successor site. If Form WH-347 is not used, the payroll shall contain:

1. Payroll number, including begin/end dates.
2. Each employee's full name and individually identifying number (such as the last 4 digits of SSN).
3. Each employee's classification.
4. Each employee's hourly wage rate (including fringe benefits) and hourly overtime pay rate.
5. Daily and Weekly number of regular hours worked in each of the employee's classification including number of overtime hours worked.
6. Itemized deductions for each employee.
7. Net wages paid to each employee.

Each certified payroll submitted must be accompanied by a "Statement of Compliance," signed by the contractor or subcontractor, or the contractor's or subcontractor's agent who pays or supervises the payment of the persons working on the contract. Signing the "Statement of Compliance," certifies the following:

(i) That the certified payroll for the payroll period contains the information required to be provided under paragraph 3.b of 1273 IV.3 Record and Certified Payrolls, the appropriate information and basic records are being maintained under paragraph 3.a of 1273 IV.3 Record and Certified Payrolls, and such information and records are is correct and complete;

(ii) That each laborer or mechanic (including each helper, apprentice,) working on the contract during the payroll period has been paid the full weekly wages earned, without rebate, either directly or indirectly, and that no deductions have been made either directly or indirectly from the full wages earned, other than permissible deductions as set forth in Regulations, 29 CFR part 3; and

(iii) That each laborer or mechanic has been paid not less than the applicable wage rates and fringe benefits or cash equivalents for the classification of work actually performed, as specified in the applicable wage determination incorporated into the contract.

The first payroll submitted by the prime contractor and each subcontractor shall be thoroughly checked to ensure the payroll is certified (contains Statement of Compliance), contains the information required (as detailed above), all laborers and mechanics, are paid, at a minimum, the rate specified in the contract for the associated classification and overtime rates are correct. It is not necessary to compare daily DWR workforce entries to the payrolls. On a monthly basis, a randomly selected contractor's or subcontractor's payroll should be checked to assure the payroll is correct and complete. On Federally funded projects, the monthly payroll checked should be that of the contractor or subcontractor of the employee interviewed per Circular Letter 1273-03 to assure continued conformance.

Thorough payroll reviews shall be made when Field Office personnel have any reason to believe that any contractor or subcontractor employee is not being paid the minimum prevailing wage. Any necessary corrections shall be made as stated in Circular Letter 1273-02.01 and shall be requested through the prime contractor.

All certified payrolls must be submitted to the Field Office weekly for each week in which any contract work is performed. If all of the certified payrolls are not received in this timeframe, a written notification will be sent to the prime contractor for the late or missing payrolls. The progress payment shall be withheld until all of the necessary certified payrolls have been received for the progress payment. The correspondence for payroll issues will be kept electronically in the payroll file for that month in an issue correspondence folder.

The certified payrolls are to be retained with the project records. Field Office personnel will create a sub folder labeled with the payroll ending date (Ex: Year-Month-Day) (19-11-26) under the File Management folder labeled "Payrolls" and save all the payrolls and email sent by the prime contractor for each ending date. It will not be necessary to maintain a printed copy in the project records.

For electronic submittals, the prime contractor shall follow the formatting below:

1. Send one email per week. Field Office personnel shall file the email electronically to ensure that the date and time of receipt is recorded.
2. Include in the email the individual payrolls for the prime contractor and all subcontractors (DO NOT send one pdf containing all payrolls)
3. The subject line of the email may read: CNxxx, Payrolls, Week ending: 19-11-26.
4. Individual files shall be designated as: CNxxx_PrimeContractorName_Endingdate.pdf, CNxxx_SubContractorName_Endingdate.pdf (Ex.:CNA123_JohnDoeContracting_19-11-26.pdf)
5. In the email text, the prime contractor shall list all approved subcontractors for the project. This list may grow during construction, as additional subcontractors are added.

6. If during the week being reported, the prime contractor or any individual subcontractor has not performed work, then in the email text next to the listed contractor, the prime contractor shall note "No work performed by (Contractor Name) for the week ending _____. (See SP107CPLP.)

The Tennessee Department of Labor and Workforce Development (TDLWD) does not need to receive a copy of the certified payroll but may be allowed access to review any payroll upon request. Payrolls shall not be made available to public inspection (except as indicated above).

TENNESSEE DEPARTMENT OF LABOR
AND WORK FORCE DEVELOPMENT
LABOR STANDARDS UNIT STAFF

Christina Tugman	Nashville Inspector	220 French Landing Drive, Suite 2B Nashville TN 37243	615-393-4615
Paula Horne	Chattanooga Inspector	1301 Riverfront Parkway, Suite 202 Chattanooga TN 37402	423-326-5386
Travis Hisel	Cookeville Inspector	444-A Neal Street Cookeville TN 38501	931-217-7314
Lisa Jordan	Knoxville Inspector	2700 Middlebrook Pike, 1st Floor Knoxville TN 37921	865-210-1119
Brian Pettis	Morristown Inspector	215 S. Liberty Hill Rd. Morristown, TN 37813	423-453-0659
Richard Tessier	Dickson Inspector	250 Beasley Dr. Dickson TN 37055	931-581-0307
Michael Pugh	Johnson City Inspector	206 High Point Dr. Johnson City TN 37601	423-223-4452
Orlandos Rutherford	Humboldt Inspector	1481 W. Mullins Street Humboldt TN 38343	731-414-1195
Vivian Moody	Memphis Inspector	3040 Walnut Grove Rd. Memphis TN 38111	901-297-0005

Example 1:

A) The prime/subcontractor's weekly pay period ends on Friday, 9/13/2019.

B) The prime/subcontractor must pay employees within 7 days of weekly pay period end date Friday, 9/13/2019, payment is due on or before Friday, 9/20/2019.

C) Certified Payrolls are due to TDOT within 7 days of payment on Friday 9/20/2019, Certified Payrolls are due on or before Friday, 9/27/2019.

September 2019

Sunday	Monday	Tuesday	Wednesday	Thursday	Friday	Saturday
1	2	3	4	5	6	7
8	9	10	11	12	13 **A**	14
15	16	17	18	19	20 **B**	21
22	23	24	25	26	27 **C**	28
29	30					

Example 2:

D) The prime/subcontractor's weekly pay period ends on Saturday, 9/14/2019.

E) The prime/subcontractor pays employees every Tuesday, payment for weekly pay period end date of Saturday, 9/14/2019 occurs on Tuesday, 9/17/2019.

F) Certified Payrolls are due to TDOT within 7 days of payment on Tuesday, 9/17/2019, Certified Payrolls are due on or before Tuesday, 9/24/2019.

September 2019

Sunday	Monday	Tuesday	Wednesday	Thursday	Friday	Saturday
1	2	3	4	5	6	7
8	9	10	11	12	13	14 **D**
15	16	17 **E**	18	19	20	21
22	23	24 **F**	25	26	27	28
29	30					

Example 3:

G) The prime contractor's weekly pay period ends on Friday, 9/13/2019.

H) The prime contractor pays employees every Wednesday, payment for weekly pay period end date of Friday, 9/13/2019 occurs on Wednesday, 9/18/2019.

I) The subcontractor's weekly pay period ends on Wednesday, 9/11/2019, and 9/18/2019 (**H**).

J) The subcontractor pays employees every Monday, so payment for weekly pay period end date of Wednesday, 9/11/2019 occurs on Monday, 9/16/2019.

K) Certified Payroll for subcontractor is due to TDOT within 7 days of payment on Monday, 9/16/2019, Certified Payrolls are due on or before Monday, 9/23/2019.

L) Certified Payrolls for prime contractor are due to TDOT within 7 days of payment on Wednesday, 9/18/2019, Certified Payrolls are due on or before Wednesday, 9/25/2019.

The Prime Contractor may submit prime and sub certified payrolls on 9/25/2019 (L) for prime contractor week ending date 9/13/2019 (G) and subcontractor week ending date 9/16/2019 (H) and be within the timeframes outlined in the Code of Federal Regulations.

If the prime contractor does NOT submit payrolls for subcontractor 9/11/2019 (I) until 9/25/2019 (L), the subcontractor payrolls will be late by two (2) days.

THE PRIME CONTRACTOR IS RESPONSIBLE FOR THE SUBMISSION OF COPIES OF PAYROLLS FOR ALL SUBCONTRACTORS.

September 2019

Sunday	Monday	Tuesday	Wednesday	Thursday	Friday	Saturday
1	2	3	4	5	6	7
8	9	10	11 **I**	12	13 **G**	14
15	16 **J**	17	18 **H**	19	20	21
22	23 **K**	24	25 **L**	26	27	28
29	30					

Example 4:

M) The prime contractor's weekly pay period ends on Friday, 9/27/2019.

N) The prime contractor pays employees every Wednesday, payment for weekly pay period end date Friday, 9/27/2019 occurs on Wednesday, 10/2/019.

O) Certified Payrolls are due to TDOT within 7 days of payment on Wednesday, 10/2/2019, Certified Payrolls are due on or before Wednesday, 10/9/2019.

Prime/subcontractor certified payrolls that are due to TDOT on or before the estimate run date must be received before processing the estimate.

September 2019

Sunday	Monday	Tuesday	Wednesday	Thursday	Friday	Saturday
1	2	3	4	5	6	7
8	9	10	11	12	13	14
15	16	17	18	19	20	21
22	23	24	25	26	27 **M**	28
29	30 **Estimate Cutoff Date**					

October 2019

Sunday	Monday	Tuesday	Wednesday	Thursday	Friday	Saturday
		1	2 **N**	3	4	5
6	7	8	9 **O**	10 **Estimate Run Date**	11	12
13	14	15	16	17	18	19
20	21	22	23	24	25	26
27	28	29	30	31		

CIRCULAR LETTER

SECTION: **1273 CONTRACT PROVISIONS – FEDERAL-AID CONTRACTS**
NUMBER: **1273-03**
SUBJECT: **LABOR INTERVIEW (DAVIS-BACON ACT)**
DATE: **JUNE 5, 2024**

TDOT Departmental Policy 301-02 shall be adhered to when conducting contractor or subcontractor employee interviews.

Labor interviews shall be conducted on all Federal Aid contracts. A minimum of one (1) interview shall be performed on each Federal Aid contract every month. An employee of either the prime contractor or a subcontractor may be interviewed. If an employee declines a request for an interview, the employee's name and "Declined to Interview" shall be recorded on the form. This will be considered as a completed interview. All interviews shall be recorded on form C-27, "Contractor's Employee Interviews".

After the interviews are made and recorded, they are to be compared to the contractor or subcontractor certified payrolls submitted for the corresponding time frame. The Field Office personnel shall verify that the employee is properly classified and is being paid the proper hourly wage rates. Any discrepancies between the two must be resolved as stated in Circular letter 1273-02.01.

Approval of the progress payment certifies that the labor interviews have been conducted unless an exception (i.e. no work, final estimate, etc.) exists.

The District Office shall maintain a tracking system to verify that labor interviews are being conducted as required by each Field Office. Each District Office within a Region is required to submit monthly reports to the Director of Region Operations (or designee). The Director of Region Operations (or designee) compiles this information into a single report and submits the report monthly to the Assistant Chief Engineer-Region Director and the Director of Construction.

Interviews may be conducted more often if conditions warrant.

Contractor's Employee Interviews

CIRCULAR LETTER

SECTION: **1273 CONTRACT PROVISIONS – FEDERAL-AID CONTRACTS**
NUMBER: **1273-04**
SUBJECT: **DAVIS-BACON ACT RELATING TO TRUCKERS**
DATE: **JULY 1, 1992**

Enclosed herewith is a copy of the Federal Highway Administration's, December 4, 1991, letter together with Mr. Thomas O. Willett's memorandum of October 3, 1991, pertaining to the application of the Davis-Bacon Act to truck drivers.

It appears this is different from the interpretations, therefore, please be governed accordingly.

U.S.Department
of Transportation
**Federal Highway
Administration**

Tennessee Division Office

112 - 2566

249 Cumberland Bend Drive
Nashville, Tennessee 37228

December 4, 1991

Mr. Carl Wood, Executive Director
Bureau of Operations
Tennessee Department of Transportation
Nashville, Tennessee

Dear Mr. Wood:

Subject: Application of Davis-Bacon Act

We are transmitting a copy of a memorandum from our Washington Office concerning application of the Davis-Bacon Act as it relates to truck drivers on Federal-aid highway projects. The memorandum discusses a current court ruling on this subject.

In short, the court has ruled that Davis-Bacon requirements do not apply to truck drivers delivering materials to a project site even if the drivers are employed by the contractor or a subcontractor. An exception would be if the driver's jobsite is the project itself. Decisions are to be made on a case by case basis. This is contrary to 29 CFR 5.2 (j) and will require a change from current practices.

This interpretation is to be implemented immediately. If there are any questions, please contact Gary Hamby of this office.

Sincerely yours,

(For) Dennis C. Cook
Division Administrator

Enclosure

Memorandum

U.S. Department of Transportation
Federal Highway Administration

RECEIVED
FHWA REG 4
OCT 08 '91

112-2566

Subject: Application of Davis-Bacon Act to Truckdrivers - Midway Decision

Date: OCT 3 1991

From: Director, Office of Engineering

Reply to Attn. of: HCC-32/HNG-2

To: Regional Administrators
Federal Lands Highway Program Administrator

BACKGROUND

The purpose of this memorandum is to provide policy guidance to the Divisions and States as a result of the decision reached in Building and Construction Trades Dept. v. Midway, decided on May 17,1991. The Court of Appeals for the District of Columbia Circuit held in Midway that Department of Labor (DOL) regulation 29 C.F.R. § 5.2(j) is inconsistent with the Davis-Bacon Act, 40 U.S.C. § 276(a). The Court of Appeals ruled that the regulation, which defines work covered under the Act to include "transporting materials and supplies to or from the building or work by the employees of the construction contractor or construction subcontractor," is invalid because it conflicts with the statutory objective of the Davis-Bacon Act, which is to pay prevailing wages to "mechanics and laborers employed directly upon the site of the work." In the view of the Court of Appeals, the Act covers only mechanics and laborers who work on the site of the federally-funded public building or public work, not mechanics and laborers employed off-site, such as suppliers, materialmen and material delivery truckdrivers, regardless of their employer. According to the Court, material delivery truckdrivers who come on to the site merely to drop off construction materials, are not covered by the Act even if they are employed by the government contractor.

The Court of Appeals in its analysis focused on the statutory text of the Act, and the phrase "site of the work." The Court relied on and quoted from DOL regulation 29 C.F.R. § 5.2(l)(1) in defining that the site of the work is "limited to the physical place where the construction, will remain," along with off-site facilities that are "dedicated exclusively" to the performance of the contract and are "so located in proximity to the actual construction location that it would seem reasonable to include them." 29 C.F.R. § 5.2(l)(2).

The Court, in its review of the legislative history of the Act, concluded that Congress clearly intended the Act to apply only to on-site workers and affirmatively intended it not to apply

to off-site workers. In the Court's view, there is no legislative history to suggest, as the DOL has ruled, that Congress intended the employment status of the worker rather than the location of his job to be determinative of the Act's coverage.

APPLICATION OF MIDWAY TO THE FEDERAL-AID HIGHWAY PROGRAM

The Court of Appeals' decision is final, as neither the Solicitor General, U.S. Department of Justice, nor the union will seek appeal to the U.S. Supreme Court.

Since we have yet to receive any guidance from DOL on its reaction to Midway, the following is our interim policy and guidance based on the Midway ruling. To the extent that the interim policy conflicts with any subsequently issued statement from DOL, the policy will then be accordingly modified.

The Court of Appeals ruled that material delivery truckdrivers, who come onto the site of the work merely to drop off construction materials, are not covered by the Davis-Bacon Act even if they are employed by the government contractor, because they are not employed directly upon the site of the work. Application of the Midway ruling relative to what constitutes the "site of the work" shall continue to depend upon DOL's definition of that term as set forth in 29 C.F.R. Part 5.2(l). The regulation states that "the site of the work" is limited to the physical place or places where the construction called for in the contract will remain when work on it has been completed and other adjacent or nearby property used by the contractor or subcontractor in such construction which can reasonably be said to be included in the "site." Further, it defines "site of the work" by stating that fabrication plants, mobile factories, batch plants, borrow pits, job headquarters, tool yards, etc., are part of the "site of the work" provided that they are dedicated exclusively, or nearly so, to performance of the contract or project, and are so located in proximity to the actual construction location that it would be reasonable to include them.

DOL defines what is not included in the term "site of the work" in 29 C.F.R. Part 5.2(l)(3). Not included in the term "site of the work" are such facilities as permanent home offices, branch plant establishments, fabrication plants, and tool yards of a contractor or subcontractor whose locations and continuance in operation are determined wholly without regard to a particular Federal or federally assisted contract or project. In addition, fabrication plants, batch plants, borrow pits, tool yards, etc., of a commercial supplier or materialmen which are established by a supplier of materials for the project before opening of bids and not on the project site, are not included in the "site of the work." Such permanent, previously established facilities are not a part of the "site of the work," even where the operations for a period of time may be dedicated exclusively, or nearly so, to the performance of a contract.

It is important to remember that the above DOL regulation defining "site of the work" was not changed by the Midway decision. As the Midway court stated in a footnote, the validity of the "site of the work" regulation was not before the Court. What has changed is the application of this regulation to determine if a particular group of truckdrivers or haulers are covered by the Davis-Bacon Act.

When determining whether the hauling work done by truckdrivers falls under Davis-Bacon coverage, one must look at three scenarios.

(1) If the work involves hauling being done on the actual "site of the work," that is the physical place or places where the construction called for in the contract will remain when work on it has been completed, then the truckdrivers are covered by the Davis-Bacon Act and are subject to prevailing wage rates.

(2) Similiarly, if the work involves hauling from an adjacent or nearby property dedicated exclusively, or nearly so, to performance of the contract or project, and so located in proximity to the actual construction location that it would be reasonable to include them, then the truckdrivers are again covered by the Davis-Bacon Act and are subject to prevailing wage rates.

(3) However, if the work involves hauling being done from an off-site location, for example at permanent home offices, branch plant establishments, fabrication plants, and/or tool yards of a contractor or subcontractor whose locations and continuance in operation are determined wholly without regard to a particular Federal or federally assisted contract or project, then the truckdrivers are not covered by the Davis-Bacon Act and are not subject to prevailing wage rates. Similiarly, fabrication plants, batch plants, borrow pits, job headquarters, etc., of a commercial supplier or materialman which are established by a supplier of materials before opening of bids and are not on the project site are not part of the "site of the work," even where the operations for a period of time may be dedicated exclusively, or nearly so, to the performance of a contract.

Because of the Midway decision, these determinations of Davis-Bacon coverage must now be based solely on the location of the truckdrivers' jobsite, rather than the employment status of the driver. These determinations of coverage must occur on a case by case basis, so it is important that the contractor indicate as early as possible how trucking and handling operations will occur on the project.

If there are any questions concerning this policy guidance, please contact Mr. Robert S. Wright (HNG-22) at FTS 366-1558 or Mr. Terence Carlson (HCC-32) at FTS 366-1395.

Thomas O. Willett

CIRCULAR LETTER

SECTION: **1273 CONTRACT PROVISIONS – FEDERAL-AID CONTRACTS**
NUMBER: **1273-04.01**
SUBJECT: **DAVIS-BACON ACT RELATING TO TRUCKERS (SUPPLEMENTAL)**
DATE: **JULY 1, 1992**

Attached is a copy of Supplemental Information Relative to Implementation of the Midway Decision which amplifies the information furnished you with Circular Letter 1273-04.

This additional information is intended to further clarify the application of Davis-Bacon requirements to truck drivers pursuant to the Midway Decision and FHWA's interim policy for implementation.

Supplemental Information Relative to
Implementation of the Midway Decision

The following information is offered as supplemental guidance in response to questions and scenarios that have been brought to our attention from the various field offices since the Midway Decision was issued.

Questions:

1. What is the effective date for implementation of policy changes arising from the Midway Decision?

   May 17, 1991, the date of the court's decision, is the effective date, since all motions for rehearing were denied and the parties in question never petitioned to the Supreme Court.

2. What projects may the Midway Decision affect?

   The decision may affect Federal-aid construction projects that were authorized on or after May 17, 1991, as well as work that occurred on or after May 17 on projects authorized prior to that date.

   The impact of Midway to existing and completed projects will depend upon the number of contractors who desire to make adjustments in payments made to truck drivers pursuant to the ruling and States' reactions to such requests. States with their own minimum wage legislation may find that such statutes preclude any adjustment.

3. Does the Midway Decision have applicability to owner/operators?

   No, there is no impact on owner/operator trucking agreements. Davis-Bacon wage rates do not apply to owner/operator trucking transactions.

4. Has the Midway Decision ruling affected the Department of Labor's (DOL's) policy involving hauling operations from the project site to a "non-dedicated" off-site facility?

   Yes, the Court's decision held that DOL's regulation, 29 CFR Section 5.2(j), defining "construction" to include the hauling of materials to and from a construction site, is invalid because it conflicts with the language of the Davis-Bacon Act in that such hauling is not performed "directly on the site of the work." As a result, the Court concluded that truck drivers engaged in hauling materials and supplies to and from a construction site are not employed "on the site of the work" and, therefore, the DOL is without statutory authority to extend the prevailing rate requirement to such drivers. It is noted that this application is in reference to only those hauling operations to and from an "off-site" facility that has been determined to be "non-dedicated."

5. In view of the Midway Decision, a number of inquiries have been made regarding applicability of Davis-Bacon wage rates under several scenarios of truck/hauler operations involving various "off-site facilities." To properly address each scenario, the "off-site facility" must be evaluated to assure it meets the criteria for "site of the work" as defined in DOL's regulations (29 CFR 5.2). The criteria is as follows:

> An "off-site" facility that comes under the definition of "site of the work" must be considered "dedicated exclusively" to the performance of the contract, and be so located in proximity to the actual construction location that it would be reasonable to include it.

An evaluation of the "off-site" facility should address the following issues:

(a) Does the "off-site" facility exist because of the Federal-aid project? If the answer is yes, then it probably meets the "dedicated exclusively" criteria, which means all truckers hauling from this facility to the project site and from the project site to the facility, regardless of whom they are employed by, are covered by Davis-Bacon wage rates.

However, when it comes to certain "off-site" facilities, such as borrow or waste pits, one must also examine whether or not it has a "commercial nature". This can be done by answering the following questions:

- Was the "off-site" facility established by a commercial supplier or materialman prior to award of the project?

- Will the "off-site" facility be used for multiple purposes (by other projects, i.e., State or the private sector)?

If the answer is yes to either of these questions, then the "off-site" facility most likely cannot be considered "dedicated exclusively" and be included as part of the "site of the work", even when the operations for a period of time may appear dedicated exclusively, or nearly so, to the performance of the contract.

(b) If the "off site" facility being evaluated is determined to meet the "dedicated exclusively" portion of the criteria, it next must be tested to assure it also meets the "in proximity to" portion. To accomplish this, several factors should be examined. These include:

- the type/nature of the project, and
- the geographical elements involved (i.e., geological and whether the project is in an urban or rural location).

The key word in this test is "reasonable." The determination of reasonableness is very subjective and best left to be determined at the local or State level based on the factors involved. For this reason, no specified distance limitations have been developed as they may vary from State-to-State and region-to-region.

(c) Scenarios that involve major route/corridor type work that consists of multiple adjacent contracts/projects and/or different contractors represent a unique set of circumstances. As a general rule, if such a group of projects have "off-site" facilities that meet the test criteria noted above for being "dedicated exclusively" and "in proximity to" for the "group of projects" only, then such facilities can be considered to be included in the definition of "site of the work." This would include "shared" facilities from different contracts/projects by the same contractor, as well as, the possibility of "shared" facilities from different contracts/projects by different contractors.

6. In light of the Midway Decision, how will determinations be made with regard to "split-trip" operations?

Due to the Midway Decision, contractors will need to establish payroll records that indicate the times that truck drivers are hauling under conditions that meet the criteria for Davis-Bacon coverage and the times when conditions do not meet the criteria. Since wage determinations are usually based on hourly increments, the wage rate that dominates for any given hour of the day will depend on the type of operation that dominates for that given hour of the day.

In cases where the legs of the trip are split (i.e., hauling from a commercial site to the project site in one leg of the trip, then hauling from the project site to a "dedicated exclusively" off-site facility in the other leg), DOL has in the past ruled the trip-leg that meets the criteria for Davis-Bacon wage rate coverage will dominate the wage coverage determination for that entire operation. It is noted that the impact of the Midway Decision on this "split-trip" issue is currently being examined in the Ames Construction Case. Until a decision is conclusively reached on this matter, DOL's current policy will stand with respect to the Midway Decision.

Application Scenarios:

Using the guidance provided above, the following scenarios furnished by the field offices are now examined to demonstrate the application of Davis-Bacon to truck drivers under Midway:

(Remember, whether or not the truck drivers are directly employed by the government contractor is no longer a relevant factor.)

Scenario 1: A trucking firm <u>is contracted</u> to haul materials from a commercial production source. The contract may be with the supplier or the prime contractor.

(The work is not covered under the Davis-Bacon Act.)

Scenario 2: The prime contractor <u>hires drivers</u> to operate trucks from a commercial production source.

(The work is not covered under the Davis-Bacon Act.)

Scenario 3: A project involves milling a bituminous overlay from concrete pavement, rubblizing and hauling off old concrete pavement, re-compacting the subgrade, placing a lime treatment on the subgrade, placing a Portland cement treated base, followed by Portland Cement Concrete Pavement. A trucking firm <u>is subcontracted</u> to do the following:

(a) to haul millings, dirt, debris, etc., from the project site to a State designated location adjacent to or near the project;

(The designated location is an "off-site" facility which meets the criteria for "site of the work." Therefore, the hauling of millings, dirt ~~and~~ broken concrete to this location is covered and subject to the prevailing Davis-Bacon wage rates.)

(b) to haul Portland cement treated base from a plant located in a commercial quarry which is set up specifically for the project;

(The plant used to produce Portland cement treated base was set up "off-site" specifically for the project, therefore it meets the criteria for "site of the work." Thus, work done at the plant and hauling from and to the plant from the actual site of work is covered and subject to the prevailing Davis-Bacon wage rates.)

(c) to haul concrete aggregate from a commercial quarry to the concrete plant location.

(The source of concrete aggregate is a bona fide commercial quarry, (i.e., a commercial supply source not dedicated exclusively to the project). It, therefore, is not considered a part of the "site of work." Work performed by drivers hauling from this source and to this source from the actual site work is not subject to the prevailing Davis-Bacon wage rates.)

Scenario 4: The project involves hauling excavated earth from various locations on the project to other locations on the same project and from a borrow site established by the contractor at the same location as the commercial hot mix plant. The hot mix plant is located within a reasonable hauling distance to the project site. The prime contractor owns several trucks capable of hauling both dirt and bituminous material and does the following work:

(a) Drivers employed by the contractor haul excavated material within the project limits for construction of the roadway embankment;

(Since the hauling of excavated materials involves working within the actual site of the work, the hauling is covered and subject to the prevailing Davis-Bacon wage rates.)

(b) After hauling all available embankment material within the project limits, the contractor's drivers haul excavated overburden from a commercial borrow site, owned by the contractor, to complete the roadway embankment;

(The contract plans required the contractor to furnish embankment material for the project. The location that the contractor furnished embankment borrow from is a commercial supply source. The source, even though owned by the contractor, does not meet the "dedicated exclusively" criteria. Thus, the hauling work is not covered by the provisions of the Davis-Bacon Act.)

(c) After completion of the roadway embankment and trimming of the subgrade to the proper grade, the contractor placed a surface of bituminous material which was hauled from his commercial hot mix plant and dumped into a laydown machine.

(The material delivery truck drivers who came onto the site of the work merely to drop off construction materials are not covered by the Davis-Bacon Act regardless if employed by the prime contractor or subcontractor. The source of the materials is of a commercial nature not "dedicated exclusively" to the project.)

Scenario 5: The project involves grading and bituminous surfacing of an existing roadway for a distance of 16 km (10 miles) with limited right-of-way. The plans call for the roadway to be widened and the shoulders to be stabilized. Included in the plans is a requirement for the contractor to furnish embankment from a location approved by the State. The contractor locates an area approximately 3.2 km (2 miles) from the nearest point of the project. The haul road from the borrow area intersects the project midway through the project. The contractor is

required to strip vegetation from the area and, by an agreement with the land owner, stockpile the top soil which will be replaced after use of the borrow pit is no longer needed. The contractor subcontracts a trucking firm to:

(a) haul embankment from the borrow location to the project site;

(The borrow pit was required by the construction plans and was not open to commercial sales. Therefore, it is considered to be included in the "site of the work" and the drivers hauling from the site are covered by the Davis-Bacon Act.)

(b) to haul aggregate from a commercial quarry to the hot mix plant that was set up adjacent to the project site at the intersection with the borrow pit haul road;

(The hauling of the aggregate from a commercial quarry to the hot mix plant site is considered a supply activity. Therefore, the drivers of these trucks are not covered by the provisions of the Davis-Bacon Act.)

(c) to haul a portion of the bituminous surfacing material from the hot mix plant to the job site;

(The hot mix plant was set up specifically (i.e., dedicated exclusively) for this project. Therefore, all drivers hauling from the plant are covered by the provisions of the Davis-Bacon Act.)

(d) The contractor used his own forces to haul AS-1 shoulder material from a plant set up in a commercial quarry specifically for this project.

(Even though the AS-1 was hauled from a commercial supply source, truck drivers are covered by the provisions of the Davis-Bacon Act because the plant used to produce the material was set up specifically for the project.)

Scenario 6: A contract is awarded to a company who has just completed a similar project during the later part of the preceding construction season. This project abuts one end of the project completed the preceding season and is of the same design. The contractor cannot locate an acceptable borrow pit site within reasonable hauling distance, however, there is a commercial quarry located within an acceptable distance from the project. An agreement is made with the quarry owner to allow the prime contractor to remove overburden from part of his quarry to be purchased and used for roadway embankment material. The owner of the quarry will take both original and final cross sections for measurement of the site of which borrow is purchased. The contractor moves in his own fleet of trucks to:

(a) haul embankment from the borrow site to the project site;

(The contract plans require the contractor to furnish embankment material for the project. The location of the contractor furnished material is a commercial supply source. The source is not considered to be included in the "site of the work" and the drivers are merely dropping off material to the project location. Therefore, they are not covered by the provisions of the Davis-Bacon Act.)

(b) haul bituminous material from the plant at the same location as it was for the previous project;

(Even though the plant was set up specifically for a project that was completed the previous construction season, it did not produce any bituminous material for commercial sale. Therefore, the drivers hauling from the plant are covered by the provisions of the Davis-Bacon Act.)

(c) A subcontract is approved for a trucking firm to haul the AS-1 for shoulders from a plant set up specifically for the project completed the previous construction season to the project site, dump the material into a shouldering machine;

(Even though the plant was set up specifically for a project that was completed the previous construction season, there was no material produced for commercial sales by the plant during that time. Therefore, the drivers are covered by the provisions of the Davis-Bacon Act.)

(d) to haul aggregate from a commercial quarry to the hot mix plant.

(Drivers of trucks hauling aggregate from commercial quarries to the hot mix plant are not covered by the provisions of the Davis-Bacon Act.)

CIRCULAR LETTER

SECTION: **1273 CONTRACT PROVISIONS – FEDERAL-AID CONTRACTS**
NUMBER: **1273-05**
SUBJECT: **SUBCONTRACTING LABOR**
DATE: **JUNE 15, 2010 (02/01/2011)**

It has been determined that contractors may subcontract labor on highway construction projects under the following conditions:

A. The contractor shall request and obtain permission to subcontract labor from the Director of Construction as with any other item of construction.

B. Typically, the subcontract request will be for a partial pay item, since there is no pay item specifically for labor charges.

C. The total amount of labor being subcontracted shall be treated as any other item of construction; therefore, the aggregate of labor and other items being subcontracted may not exceed the permissible limits set out in the contract. In addition, the dollar amount of labor subcontracted will be treated as any other subcontracted item of Subsection 108.01 of the Standard Specifications.

D. The contractor must comply with all terms of the construction contract regarding labor, Equal Employment Opportunity, the Davis-Bacon Act and all related statutes, the Tennessee Prevailing Wage Act and all regulations of the Tennessee Department of Labor.

Contractors who utilize labor through Employee Lease Agreements (see CL 1273-05.01) cannot request subcontract approval for that labor.

Note: Procedures also apply to State Funded projects.

CIRCULAR LETTER

SECTION: **1273 CONTRACT PROVISIONS – FEDERAL-AID CONTRACTS**
NUMBER: **1273-05.01**
SUBJECT: **EMPLOYEE LEASE AGREEMENTS**
DATE: **MAY 15, 2024**

Prime contractors may enter into employee lease agreements with an employee leasing firm meeting all relevant Federal and State regulatory requirements if the leased employees are under the direct supervision and control of the contractor's superintendent and/or supervisor. Leased employees may be considered part of the prime's "own organization" if the following conditions apply:

1. The prime contractor maintains control over the supervision of the day-to-day activities of the leased employees;
2. The prime contractor remains responsible for the quality of the work of the leased employees;
3. The prime contractor retains all power to accept or exclude individual employees from work on the project;
4. The prime contractor remains ultimately responsible for the payment of predetermined minimum wages, the submission of payrolls, statements of compliance and all other Federal regulatory requirements.

If the leased personnel are treated as employees of the prime contractor, and would be considered as such but for their actual employment by a leasing agency, then they should be considered employees of the prime contractor's organization and not as a subcontractor (23 CFR 635.116(a)). Circular Letter 1273-05 contains information regarding requirements for subcontracting labor.

Additionally, for the purpose of Davis-Bacon compliance, the prime's agreement with the employee leasing firm must ensure compliance with minimum wage requirements. The prime is also responsible for providing the appropriate payroll information for all leased employees. To meet this requirement, the Employee Leasing Agency shall be responsible for submitting a certified payroll to the Prime showing the actual wages paid to the leased employee. The Prime is then responsible for verifying that the wages shown meet or exceed minimum wage requirements for the work classification performed. The Prime shall then submit the payroll to the Field Office.

Prime contractors shall forward copies of any executed employee lease agreements to the Field Office for inclusion in the project records.

NOTE: Procedures also apply to State Funded projects.

CIRCULAR LETTER

SECTION: **1273 CONTRACT PROVISIONS – FEDERAL-AID CONTRACTS**
NUMBER: **1273-06**
SUBJECT: **DAVIS-BACON ACT RELATING TO SURVEY CREWS**
DATE: **DECEMBER 15, 2007**

The Wage and Hour Division of the Employment Standards Administration, U.S. Department of Labor (DOL), in its Field Operations Handbook (6/1/87) - Section 15e19(a) - "Survey Crews" states that where surveying is performed immediately prior to and during actual construction, in direct support of construction crews, such activity is covered by the Davis-Bacon and Related Acts (DBRA). Coverage to Survey Crews is also provided under the Contract Work Hours and Safety Standards Act (CWHSSA). DBRA requires payment of the prevailing wages specified in the contract and CWHSSA requires payment of time and a half for all hours exceeding 40 hours in a workweek.

If the contract contains the Item No. 105-01 or 105M01 Construction Stakes, Lines and Grades and the survey personnel are performing work that will be paid for under this item, then they must be paid the contract prevailing wage for their classification <u>and</u> included on weekly certified payrolls. However, if the contract does <u>not</u> contain Item No. 105-01 or 105M01, and no subcontract form has been submitted for a company employing the survey personnel, then these workers may be providing services to the contractor and do not have to be included on certified payrolls.

All survey personnel performing work to meet the contract's DBE goal shall be paid the contract prevailing wage and shall be included on the weekly certified payrolls.

The Tennessee Department of Labor & Workforce Development currently has the following classifications in the Highway Construction Crafts for survey party work persons:

<u>Survey Instrument Operator (Craft 18)</u> - Obtains data pertaining to angles, elevations, points, and contours used for construction, map making, mining, or other purposes, using alidade, level, and transurveying instruments. Compiles notes, sketches, and records of data obtained and work performed. Directs work of subordinate members of survey team. Performs other duties relating to surveying work as directed by Chief of Party.

<u>Survey Helper/Rodman (Unskilled Laborer – Craft 23)</u> - Performs any of the following duties to assist in surveying land: Holds level or stadia rod at designated points to assist in determining elevations and laying out stakes for mapmaking, construction, mining, land, and other surveys; calls out reading or writes station number and reading in notebook; marks points of measurement with elevation, station number, or other identifying mark; measures distance between survey points, using steel or cloth tape or surveyor's chain; marks measuring points with keel (marking crayon), paint sticks, scratches, tacks, or stakes; places stakes at designated points and drives them into ground at specified elevation, using hammer or hatchet; cuts and clears brush and trees from line of survey, using brush hook, knife, ax, or other cutting tools.

A survey crew member who primarily does manual work such as clearing brush is classified as an unskilled laborer and is covered for the time so spent. Attached are Sections 15e19(a) and (b) of the Field Operations Handbook which address this situation.

15e19 Survey crews

(a) Where surveying is performed immediately prior to and during actual construction, in direct support of construction crews, such activity is covered by DBRA. Under the United States Housing Act of 1937 and the Housing Act of 1949, the "development of the project" coverage test is broader and may also cover preliminary survey work.

(b) The determination as to whether certain members of survey crews are laborers or mechanics is a question of fact. Such a determination must take into account the actual duties performed. As a general matter, instrumentman or transitman, rodman, chainman, party chief, etc. are not considered laborers or mechanics. However, a crew member who primarily does manual work, for example, clearing brush, is a laborer and is covered for the time so spent.

15e20 Timekeepers.

Timekeepers who perform no manual labor on construction projects are not considered to be "laborers" or "mechanics" for purposes of DBRA. However, if such workers perform other duties as laborers or mechanics, they must be paid the WD rate for the particular classification involved for the time so spent.

15e21 [redacted]

(a) Truck drivers employed by a construction prime contractor or [redacted] to transport materials or equipment to a DBRA project, or from a DBRA project to return materials to the contractor's or subcontractor's plant or yard, are covered. Drivers employed by a prime contractor or subcontractor transporting materials or equipment from one DBRA project to another DBRA project are also covered, and the time so spent is compensable at the DBRA rate required to be paid on the latter project. Drivers employed by a prime or subcontractor transporting materials or equipment away from a DBRA project to another project of the same contractor or subcontractor are also covered, even where the latter project is not subject to DBRA.

(b) Truck drivers engaged in hauling excavated material, debris, dirt, asphalt for recycling, etc. away from a DBRA-covered construction site are covered for the time spent loading at the site, transporting the material and unloading. All truck drivers engaged in such activities are covered regardless of their employer's status as a materialman or a construction contractor. It makes no difference whether or not an employer who is engaged in