CIRCULAR LETTER

SECTION: **102.01 PREQUALIFICATION STATEMENTS AND COMPETENCY OF BIDDERS**
NUMBER: **102.01-01**
SUBJECT: **CONTRACTOR PERFORMANCE EVALUATION**
DATE: **MARCH 22, 2024**

As required in the prequalification rules, prime contractors are to be evaluated on all contracts using the Contractor Performance Evaluation Form. The Contractor Performance Evaluation shall be completed at the end of each calendar year and/or upon the completion of each contract. The evaluation period will cover from the beginning of each year or the beginning of the contract through the end of each year or the end of the contract. If the contract has more than one evaluation, then the final evaluation should be a representation of the previous evaluation(s) and the remaining evaluation period.

The Contractor Performance Evaluation Form shall be prepared following the guidance included in the form. The evaluation shall be rated by the Team Lead. The Team Lead should consult with Regional Safety Office for their feedback for rating the Safety Practices section. The evaluation shall be reviewed by the Region Transportation Engineer at District and approved by the District Manager or Director of Regional Operations. For contracts with consultant engineering and inspection (CEI), the consultant should rate and sign the evaluation after reviewing it with the TDOT Team Lead or Region Transportation Engineer at District. Evaluations of less than 70 shall also require review by the Director of Construction.

The contractor shall be provided a copy of the completed evaluation by the District Office. The contractor shall be given an opportunity to meet and discuss the evaluation regardless of the rating.

The Field Office personnel shall enter the contractor performance evaluation rating for each evaluation period into SiteManager under Contract Administration>Contractor Management>Contractor Evaluation. An electronic copy of the approved evaluation form shall also be attached in SiteManager for each rating in the Contractor Evaluation window. A scanned copy of the signed Contractor Performance Evaluation shall be emailed to Headquarters Construction Division, at **TDOT.ContPerfEvals@tn.gov**

A contractor's overall performance rating will be determined by the Headquarters Construction Division. It will be based on a weighted rating of any current prime contract(s) and any prime contract(s) completed within two years of the contractor submitting for prequalification. The overall weighted rating will be calculated using the original contract amounts and the related ratings for each respective contract.

Contractor Performance Evaluation Form

CIRCULAR LETTER

SECTION: **102.01 PREQUALIFICATION STATEMENTS AND COMPETENCY OF BIDDERS**
NUMBER: **102.01-02**
SUBJECT: **ATTESTATION FOR ILLEGAL IMMIGRANTS**
DATE: **MARCH 1, 2024**

Effective with the October 27, 2006 letting, all contracts will include Special Provision 102I. Special Provision 102I, "Employing and Contracting with Illegal Immigrants" requires the Contractor to attest, certify, and assure that they are not knowingly utilizing the services of illegal immigrants in the performance of each contract and shall not knowingly utilize the services of any subcontractor who will utilize the services of an illegal immigrant in the performance of each Contract. The Prime Contractor makes this initial attestation when they accept and sign the proposal contract.

The Prime Contractor must reaffirm this requirement semi-annually for each contract by completing the attached "attestation" form. To assure consistent and timely attestation, the Prime Contractor shall submit a completed attestation form for each awarded contract on January 1st and July 1st each calendar year in which work has not been completed.

The Field Office personnel shall maintain a file for each project with the completed Attestation forms for proper documentation. If a Prime Contractor fails to submit the required attestation form, the partial progress payment shall be withheld until the attestation is submitted by the contractor.

For projects with Consultant Engineering and Inspection services (including Erosion Prevention and Sediment Control Inspection), the project file shall include the completed Attestation forms for the CEI consultant. The consultant shall submit a completed attestation form for each project CEI contract agreement on January 1st and July 1st each calendar year in which work has not been completed. If a Consultant fails to submit the required attestation form, Monthly Progress Billings shall be withheld until the completed attestation form is submitted by the consultant.

ATTACHMENT 1

ATTESTATION REGARDING PERSONNEL USED IN CONTRACT/AGREEMENT PERFORMANCE

DUE JANUARY 1ST AND JULY 1ST BI-ANNUALLY	
SUBJECT CONTRACT/AGREEMENT NUMBER:	
ENGINEER/CONTRACTOR LEGAL ENTITY NAME:	
FEDERAL EMPLOYER IDENTIFICATION NUMBER: (or Social Security Number)	

The Engineer/Contractor, identified above, does hereby attest, certify, warrant, and assure that the Engineer/Contractor shall not knowingly utilize the services of an illegal immigrant in the performance of this Contract/Agreement and shall not knowingly utilize the services of any subcontractor who will utilize the services of an illegal immigrant in the performance of this Contract/Agreement.

SIGNATURE & DATE: _____

NOTICE: This attestation MUST be signed by an individual empowered to contractually bind the Engineer/ Contractor. If said individual is not the chief executive or president, this document shall attach evidence showing the individual's authority to contractually bind the Engineer/Contractor.

CIRCULAR LETTER

SECTION: **104.03 Contract Change Notification**
NUMBER: **104.03-01**
SUBJECT: **Contract Change**
DATE: **JULY 15, 2024**

Contract Change Notification

A. Standard Projects: Please refer to Standard/Supplemental Specification 104.03 for guidance on how to proceed with the contract change order notification process.

B. Alternative Delivery Projects:

1. For Design Build projects, all potential change orders shall be sent to Headquarters Alternative Delivery Division for approval and Headquarters Construction Division for review as soon as the potential change has been identified.

2. For all other Alternative Delivery projects, all potential change orders shall be sent to Headquarters Construction Division for approval as soon as the potential change has been identified.

Change Order Guidance for Notification Requirements

The following flow chart directs when and who to submit the change order documentation as well as notification requirements.

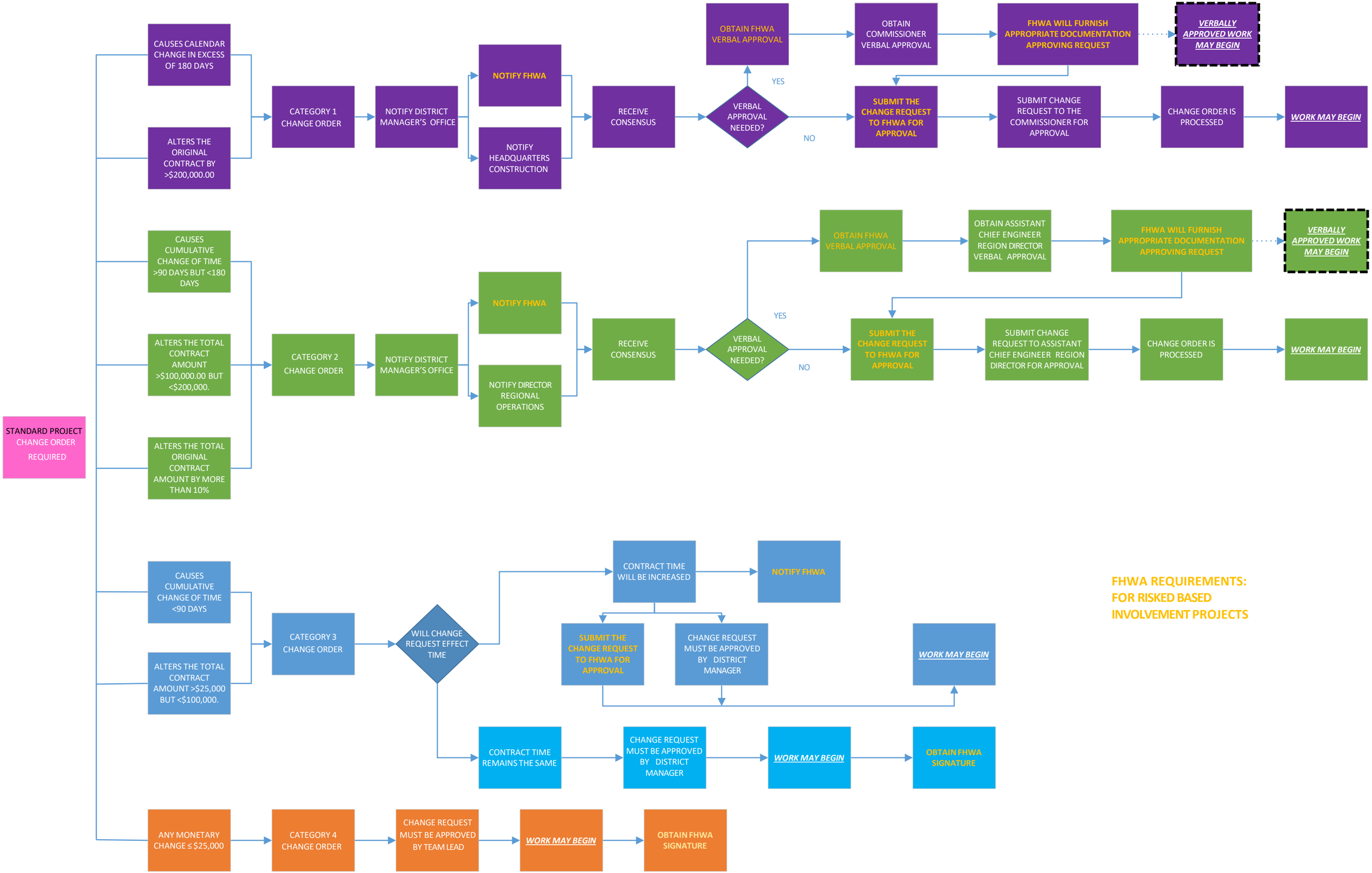

FHWA REQUIREMENTS: FOR RISKED BASED INVOLVEMENT PROJECTS

CIRCULAR LETTER

SECTION: **104.03 CONTRACT CHANGE NOTIFICATION**
NUMBER: **104.03-02**
SUBJECT: **CHANGE ORDER PROCEDURE**
Date: **July 15, 2024**

In accordance with Departmental Policy Number 355-01, Approval of Construction Change Orders and Force Account Work, all Standard Project and Alternative Delivery Project Change Orders shall be prepared electronically for execution including the appropriate justification and supporting documentation. When the Change Order is completely executed through the Adobe Sign process, the Resident Engineer or designee shall ensure the fully executed Change Order form, Change Order Signature page, and the supporting documentation is stored electronically in Contract File Management, CMS for future review and auditing purposes.

Change Orders (COs) shall be "Approved By" and "Recommended for Approval" as shown in the following tables for Standard Projects and Alternative Delivery Projects:

Standard Projects

	Category- 1	Category- 2	Category- 3	Category- 4
Commissioner	A			
Chief of Bureau Engineering		*		
Assistant Chief of Engineering	R	*		
TDOT Director of Construction	R	*		
TDOT Assistant Chief Engineer (Region Director)	R	A	*	
TDOT Director of Region Operations	**	R	*	*
TDOT Manager, District		R	A	*
TDOT Team Lead			R	A
Transportation Engineering Specialist			**	**

Alternative Delivery Projects

	Category- 1	Category- 2	Category- 3	Category - 4
Commissioner	A			
Assistant Chief Engineer of Program Delivery	R	A	*	*
TDOT Director of Alternative Delivery	R	R	*	*
TDOT Manager, Regional Alternative Delivery	R	R	A	A
TDOT Project Manager, Regional Alternative Delivery			R	R

A= Final Approval Change Order (the Federal Highway Administration (FHWA) must also approve COs with Risk-Based Involvement)
*= May approve for the Approving Authority
R= Recommend for first level Approval
**= May recommend approval for Recommending Authority

Change Order approval authority may not be delegated to a lower hierarchy level, only to a higher hierarchy level. However, recommendation for approval may be delegated to the next lower hierarchy level. For example, for a Category 3 Change Order, if a TDOT Manager, District position is vacant, the CO cannot be approved by the TDOT Team Lead but would rather have to be signed by the TDOT Director, Region Operations or higher.

The Resident Engineer will review all Change Orders for their District to ensure consistency and uniformity of the documents. The Resident Engineer or their designee will initiate the signature process in Adobe Sign per the information given below.

Recipients – Reviewers/Approvals – Adobe Sign

- The Contractor shall be set up as the first signature followed by the Surety.
- Subsequent Reviewers/Approvers from the District/Region/Headquarters shall be set up in accordance with the above referenced policy and listed in the order shown on the Tables below for Standard Projects and Alternative Delivery Projects:
- For Projects with Risk-Based Involvement, FHWA Area Engineer shall be the final signature.

CC Section – Adobe Sign

- Additional Regional Personnel, as needed

Note: Adobe Sign Only allows 11 CC Recipients. If more than 11 recipients need to be copied on the CO, the Resident Engineer will need to send a PDF copy of the signed change order after execution.

CC Recipients will receive a notification when the change order is initiated and again when fully executed.

For Resurfacing Projects, send a PDF copy of the signed change order to the following personnel:

- Statewide Pavement Program Manager: Sharon.Sanders@tn.gov

If the change order includes utilities, as noted in Memo 8/9/2021, send a PDF copy of the signed change order to the following personnel:

- Region Utilities Office: @tn.gov
- Program Operations Office: John.Kahle@tn.gov and Jeremy.Beeman@tn.gov
- Project Analyses Section: Anna.Meacham@tn.gov and Anna.Biggs@tn.gov

Attached Files

- Change Order Form
- Change Order Signature Page
- Supporting Documentation

The Resident Engineer shall ensure the fully executed Change Order Form, Change Order Signature Page and Supporting Documentation is stored electronically for future review and auditing purposes.
Paper Distribution is no longer needed.

Change Order Approval - Standard Projects - Adobe Sign

Standard Projects		Category 1	Category 2	Category 3	Category 4
Contractor **	Project Specific	Signature [1]	Signature [1]	Signature [1]	Signature [1]
Surety **	Project Specific	Signature [2]	Signature [2]	Signature [2]	Signature [2]
FHWA (Risk Based Involvement projects only)	Area Engineer	Signature [7]	Signature [6]	Signature [5]	Signature [4]
Headquarters					
Commissioner	TDOT.CO.Approval@tn.gov	Signature [6]			
Chief of Bureau of Engineering	Will.Reid@tn.gov	Copied			
Assistant Chief of Engineering	Lori.Lange@tn.gov	Signature [5]			
Director, Construction	Brian.Egan@tn.gov	Signature [4]	Copied	Copied	Copied
Manager, Contract Letting & Administration Support	Jason.Blankenship@tn.gov	Copied See draft approval note below	Copied See draft approval note below	Copied	Copied
Project Manager	Project specific	Copied See draft approval note below	Copied See draft approval note below	Copied	Copied
Finance	Ryan.Boling@tn.gov	Copied	Copied	Copied	Copied
Regional					
Assistant Chief Engineer Regional Director	Region Specific	Signature [3] See draft approval note below	Signature [5] See draft approval note below		
Director Regional Operations	Region Specific	See draft approval note below	Signature [4] See draft approval note below		
Local Materials & Test Field Services	Region Specific	Copied	Copied	Copied	Copied
District					
Manager, District	District Specific	Copied	Signature [3]	Signature [4] See draft approval note below	Copied See draft approval note below
Team Lead	District Specific			Signature [3]	Signature[3] See draft approval note below
Transportation Engineering Specialist	District Specific	Copied	Copied	Copied	Copied
	District Specific				
	District Specific				

** Authorized signers for Contractor & Surety may be found at: CMS > HQ Construction > ESignature. Master Compiled excel document

Signature Superscripts indicate the order the signatures should be assigned in Adobe Sign Draft approvals.

- Change Order 1 - Final Drafts will go to Regional Director & Senior Transportation Engineer- HQ Construction before entering in Adobe Sign
- Change Order 2 - Final Drafts will go to Regional Director & Senior Transportation Engineer- HQ Construction before entering in Adobe Sign.
- Change Orders 3 & 4 - District Manager will be the final approval before entering in Adobe Sign.

Change Order Approval - Alternative Delivery Projects - Adobe Sign

Alternative Delivery Projects		Category 1	Category 2	Category 3	Category 4
Contractor **	Project Specific	Signature [1]	Signature [1]	Signature [1]	Signature [1]
Surety **	Project Specific	Signature[2]	Signature [2]	Signature [2]	Signature [2]
FHWA (Risked Based Involvement Projects only)	Area Engineer	Signature [7]	Signature [6]	Signature [5]	Signature [5]
Headquarters					
Commissioner	TDOT.CO.Approval@tn.gov	Signature [6]			
Chief of Bureau of Engineering	Will.Reid@tn.gov	Copied			
Assistant Chief Engineer of Program Delivery	Joe.Deering@tn.gov	Signature [5]	Signature [5]		
Director, Construction	Brian.Egan@tn.gov	Copied	Copied	Copied	Copied
Director, Alternative Delivery	Clayton.Markham@tn.gov	Signature [3]	Signature [4]	Copied	Copied
Manager, Contract Letting & Administration Support	Jason.Blankenship@tn.gov	Copied	Copied	Copied	Copied
Finance	Ryan.Boling@tn.gov	Copied	Copied	Copied	Copied
Regional					
Project Management	Project Specific	Copied	Copied	Copied	Copied
Manager	Region Specific	Signature [3]	Signature [3]	Signature [4]	Signature [4]
Project Manager 3	Region Specific	Copied	Copied	Signature [3]	Signature [3]
Local Materials & Test Field Services	Region Specific	Copied	Copied	Copied	Copied
**Authorized signers for Contractor & Surety may be found at: CMS > HQ Construction > ESignature. Master Compiled excel document					
Signature Superscripts indicate the order the signatures should be assigned in Adobe Sign Draft Approvals.					

Change Order – Additional time due to overruns of major items (Non-CPM projects) (CL 108.07-01)

Responsible Person	Recipient
Team Lead/ District Change Order Designee	– "Determination of Time based on Quantity Increases" form • Complete form • Collect required signatures – Create SiteManager record and attach signed form – Email completed form: • Contract Payments Section Ryan.Boling@tn.gov

ADOBE Sign Detailed Examples On The Following Pages:

1. Select the appropriate Change Order Category Template from the "Start from Library" on the Adobe Sign Home Dashboard. (Note: These templates are "Shared by Blake Fulton".)

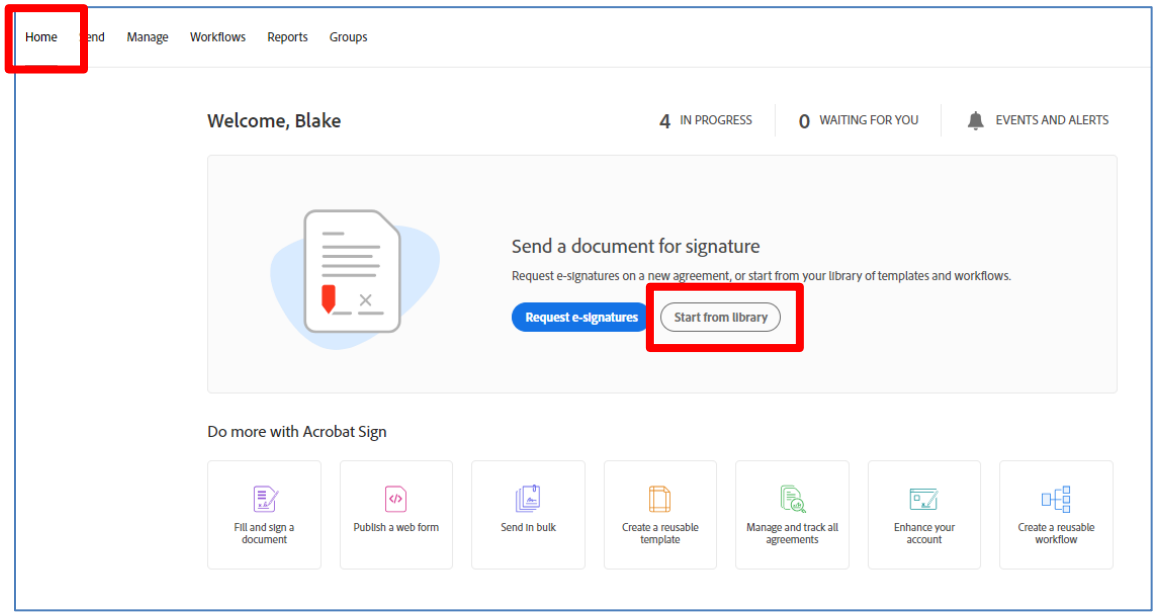

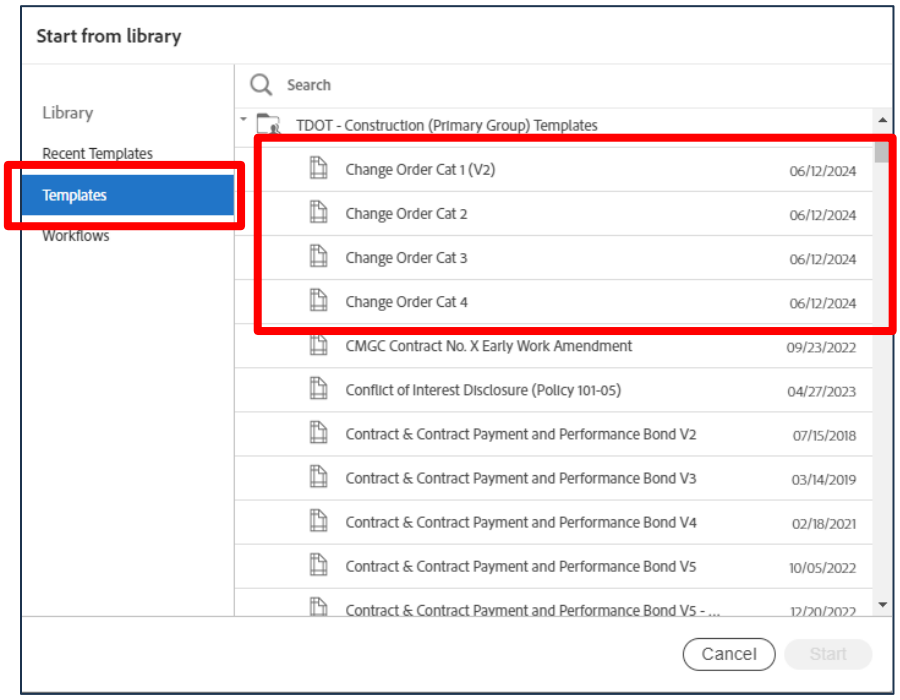

2. Enter the email addresses in the order shown below. (Do NOT change the order)

Change Order Category 1 Example

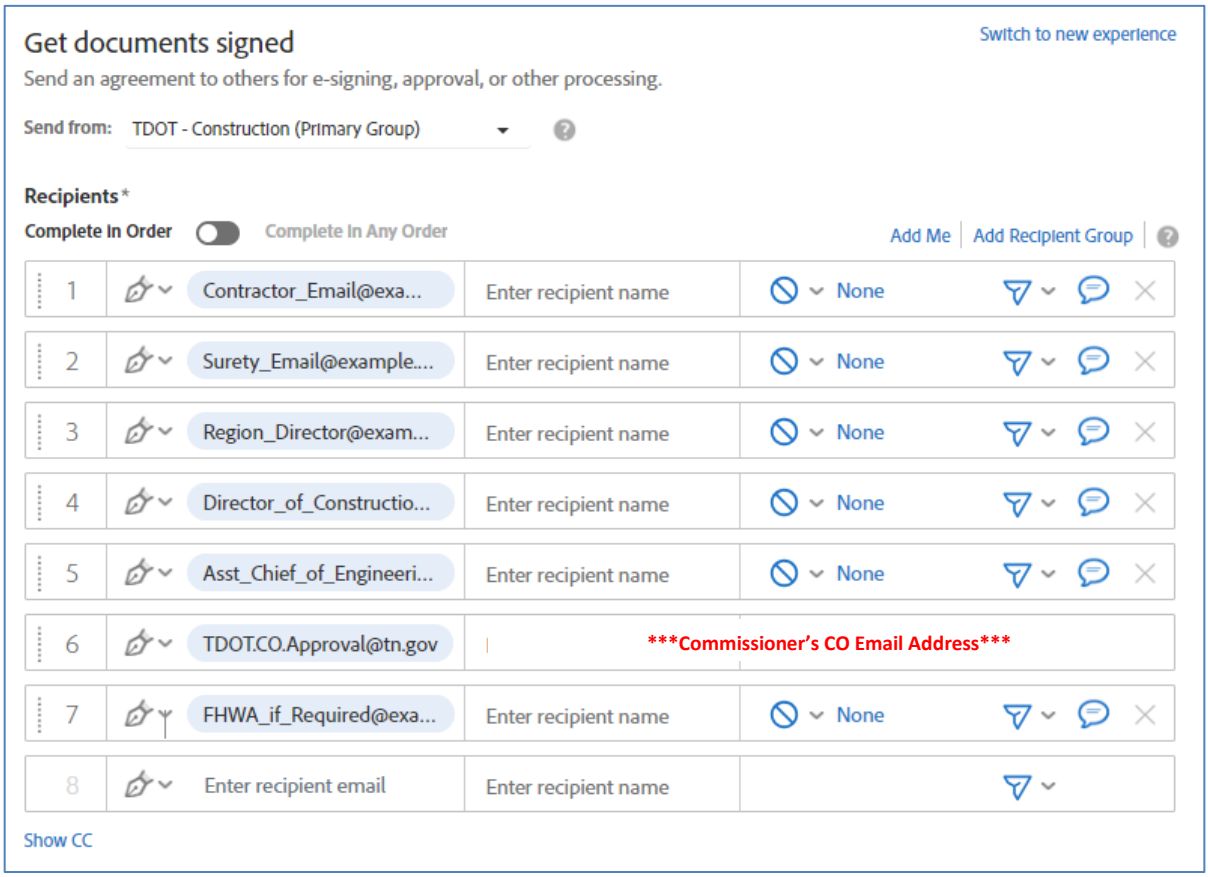

Change Order Category 2 Example

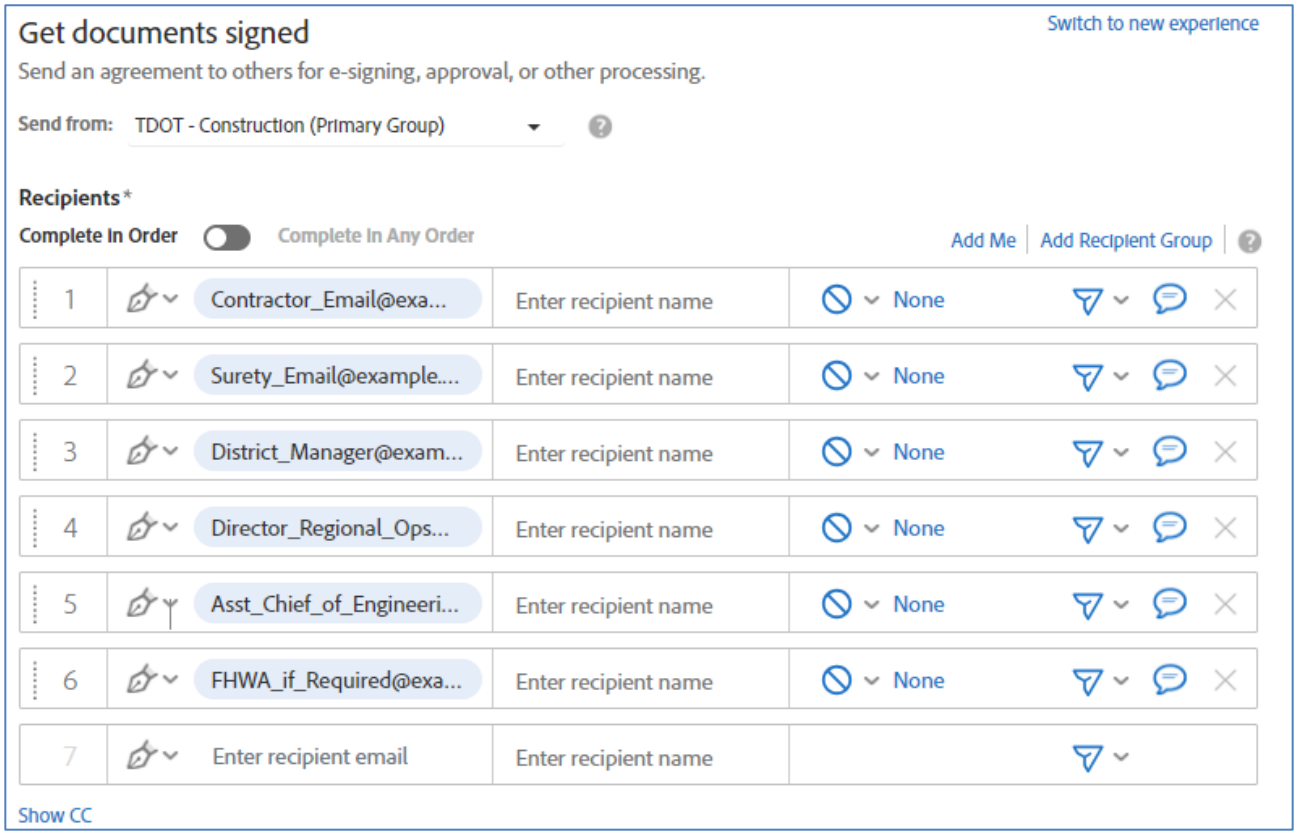

Change Order Category 3 Example

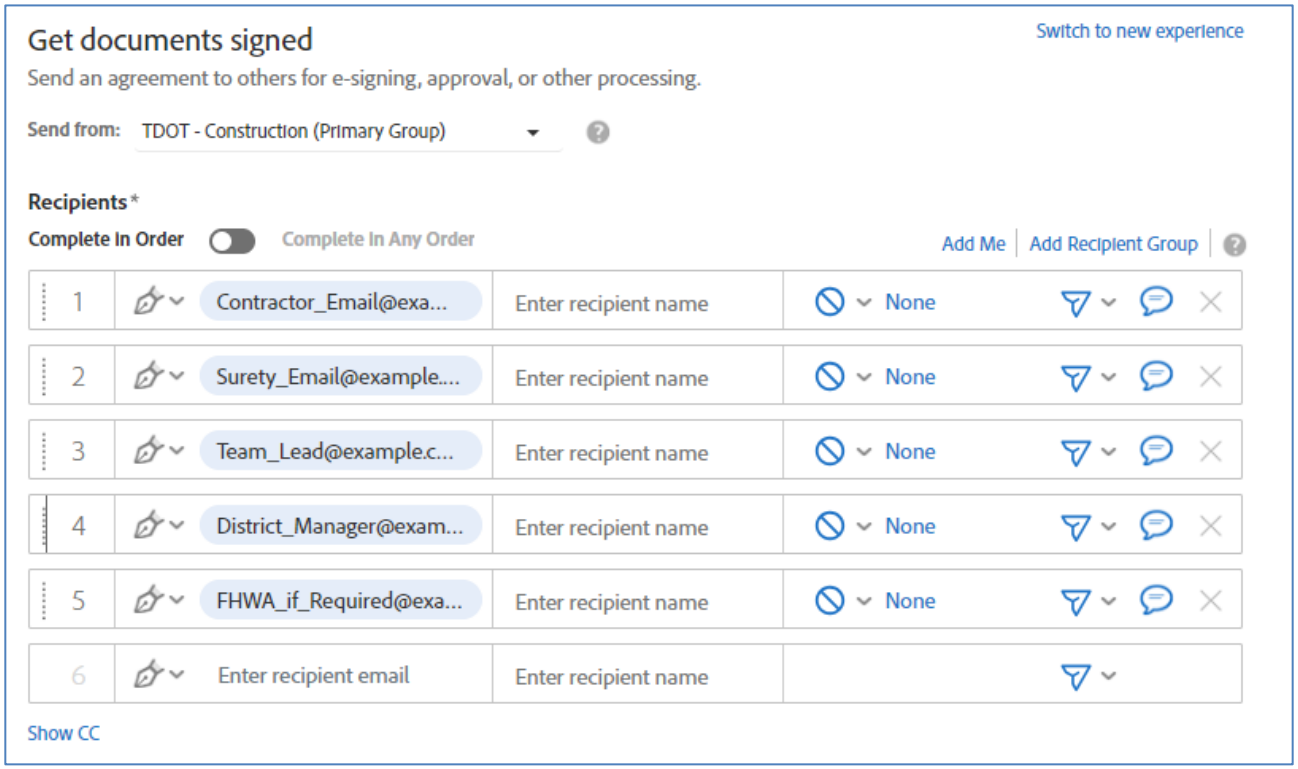

Change Order Category 4 Example

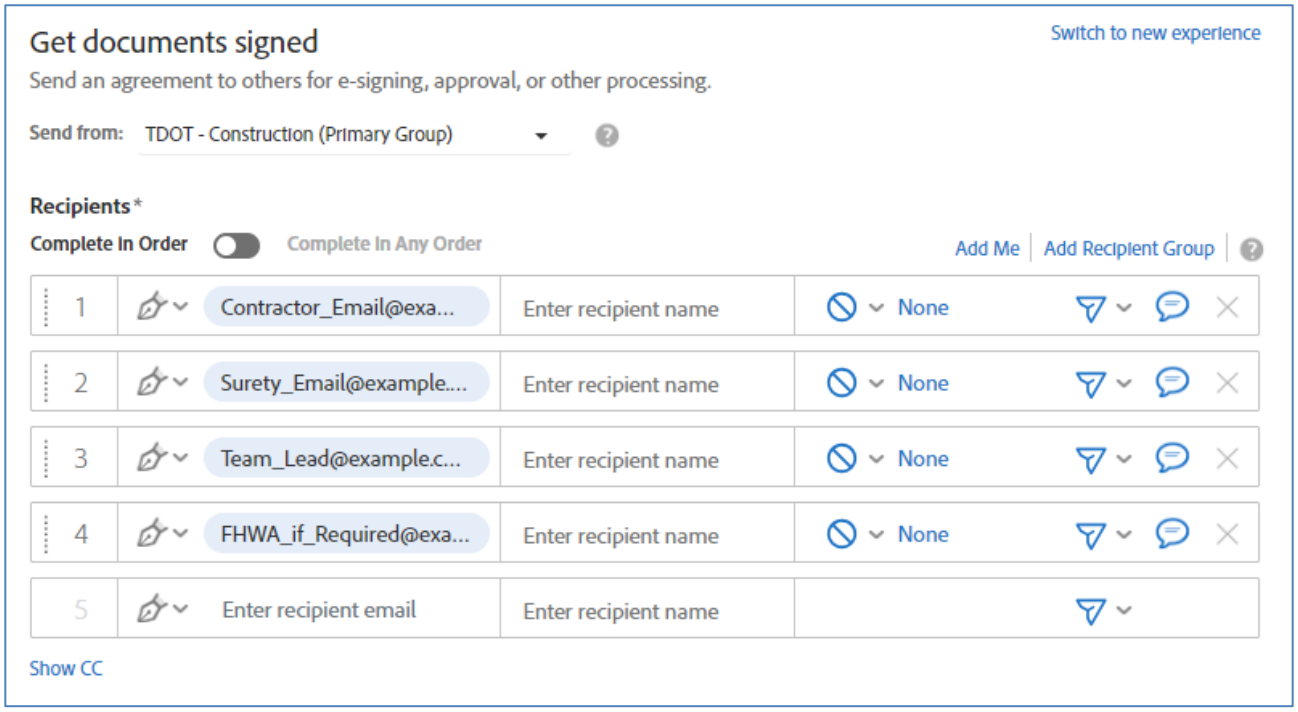

3. Add all cc's to the list. The cc list will receive confirmation when the process is started and finalized. ****Include all cc recipients as noted in the Circular Letter****

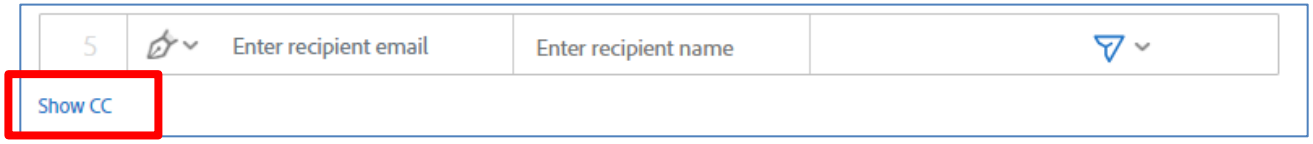

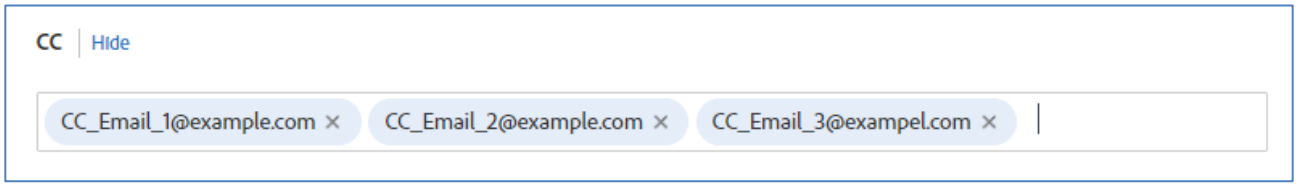

4. Enter in the Contract Number, Change Order Number and Category into the Message Box.

5. Upload all change order forms and supporting documentation. ****Pay attention to the order of the documents – they should be listed in the below order****

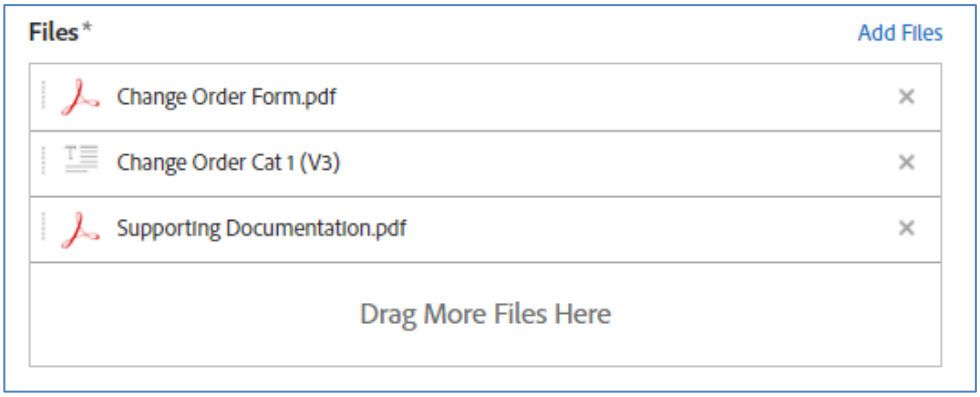

6. Review for accuracy and select Send.

7. Once the screen loads, all change order documents should appear in the order selected from step five (5). Scroll down to the signature page or press the blue Start Button.

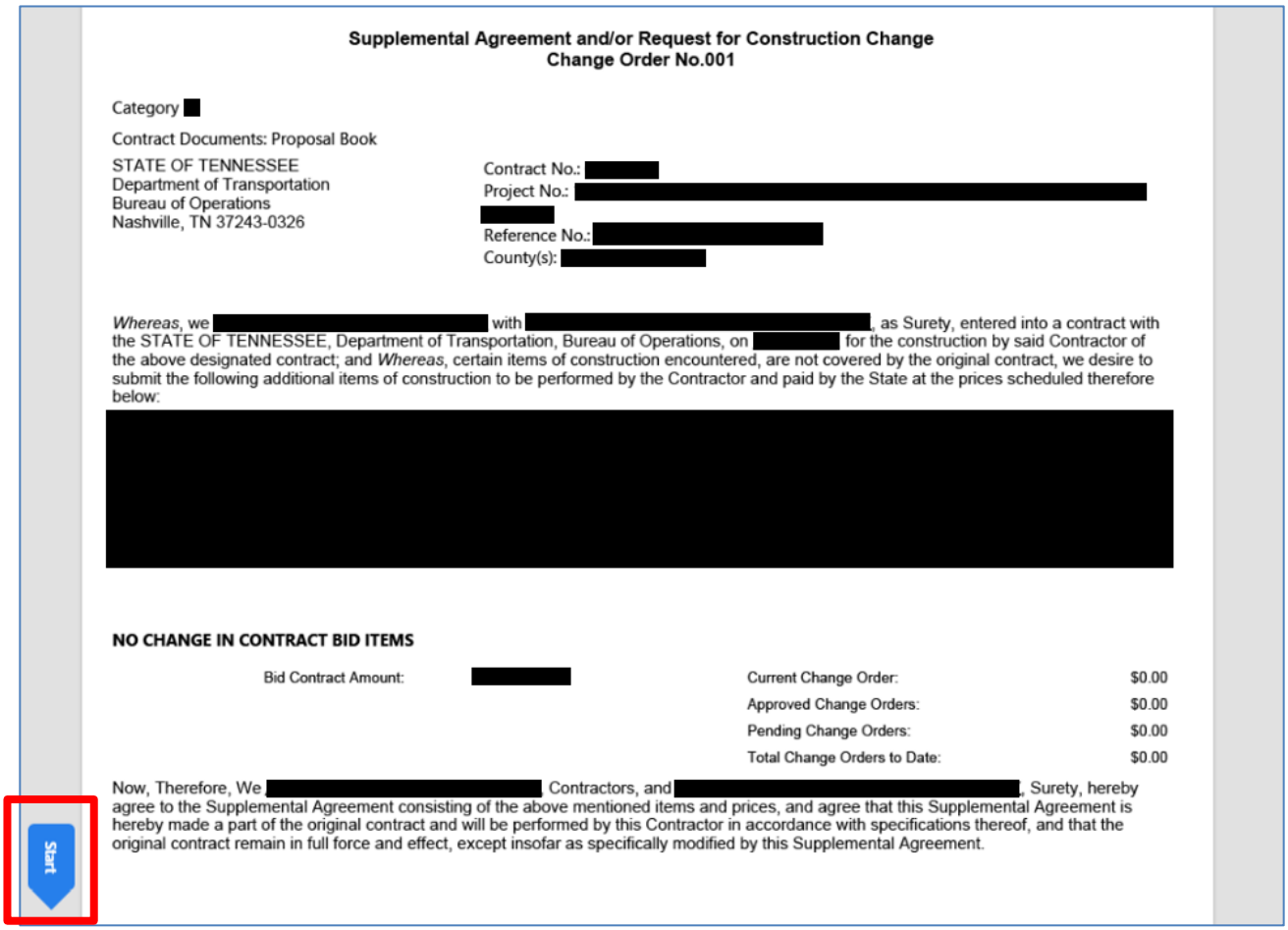

Supplemental Agreement and/or Request for Construction Change
Change Order No.001

Category [redacted]

Contract Documents: Proposal Book

STATE OF TENNESSEE
Department of Transportation
Bureau of Operations
Nashville, TN 37243-0326

Contract No.: [redacted]
Project No.: [redacted]
Reference No.: [redacted]
County(s): [redacted]

Whereas, we [redacted] with [redacted], as Surety, entered into a contract with the STATE OF TENNESSEE, Department of Transportation, Bureau of Operations, on [redacted] for the construction by said Contractor of the above designated contract; and *Whereas*, certain items of construction encountered, are not covered by the original contract, we desire to submit the following additional items of construction to be performed by the Contractor and paid by the State at the prices scheduled therefore below:

[redacted]

NO CHANGE IN CONTRACT BID ITEMS

Bid Contract Amount:	[redacted]	Current Change Order:	$0.00
		Approved Change Orders:	$0.00
		Pending Change Orders:	$0.00
		Total Change Orders to Date:	$0.00

Now, Therefore, We [redacted], Contractors, and [redacted], Surety, hereby agree to the Supplemental Agreement consisting of the above mentioned items and prices, and agree that this Supplemental Agreement is hereby made a part of the original contract and will be performed by this Contractor in accordance with specifications thereof, and that the original contract remain in full force and effect, except insofar as specifically modified by this Supplemental Agreement.

Start

8. Enter the Contract Number and Change Order Number in the designated fields.

SIGNATURE PAGE

Supplemental Agreement and/or Request for Construction Change

Next

Contract No.: _____*
Change Order No.: _____*
Category 1

9. Select *Click to Send* to send the document for signatures.

CIRCULAR LETTER

SECTION: **104.03 CONTRACT CHANGE NOTIFICATION**
NUMBER: **104.03-03**
SUBJECT: **USE OF PUBLIC INTEREST FINDINGS**
DATE: **OCTOBER 15, 2021**

Projects with Federal Funds

The Federal Highway Administration (FHWA), through the Stewardship and Oversight Agreement, has delegated TDOT authority to approve the use of public agency owned materials made available, the use of more cost effective or an emergency contract method, or the use of publicly owned equipment.

A. Procedures for Use of Materials Made Available by a Public Agency

The purpose of this document is to establish the procedures and requirements to utilize public agency owned materials on projects with federal funds.

Code of Federal Regulations (23 CFR 635.407) prohibits the use of public agency owned materials on projects using federal funds. Contracts for projects shall require the contractor to select the source from which materials are purchased. Exception to this requirement may be made when there is a definite finding by the State that it is in the public interest to require the Contractor to use material furnished by the State or from sources designated by the State.

The TDOT approval process must be completed in accordance with the following procedures.

A Public Interest Finding (PIF) must be submitted to Headquarters Construction for approval. The following information may be included in the PIF:

1. Describe how the use of the materials will benefit the public
2. Demonstrate the proposed use of the materials is more cost-effective than meeting the requirement
3. Show that Federal funds will not increase due to the use of the materials
4. Provide documentation showing any potential bidders are aware of the availability of the materials including the rates to be charged
5. Demonstrate the use of the materials does not provide a profit to the public agency
6. Demonstrate the use of the materials does not raise the cost of the proposed or current project.
7. Materials to be utilized shall be approved by the Materials and Tests Division
8. The material shall comply with all requirements and specifications
9. Any environmental requirements shall be outlined to provide justification, if applicable
10. The Federal Highway Administration directs that in most instances a disposal site for surplus material will be at the contractor's option. However, possible disposal sites may be identified within the plans or contract provisions.

If TDOT owns or has control over the source of a local material, the unit price at which such material will be made available to the contractor must be stated in the plans or special provisions. Federal participation will be limited to (1) the cost of the material to the TDOT or other public agency; or (2) the fair and reasonable value of the material, whichever is less. Special cases may arise that will

justify Federal participation on a basis other than that set forth above. Such cases should be fully documented and receive advance approval by Headquarters Construction.

Costs incurred by TDOT or other public agency for acquiring a designated source or the right to take materials from it will not be eligible for Federal participation if the source is not used by the contractor.

The contract provisions for one or a combination of Federal projects shall not specify a mandatory site for the disposal of surplus excavated materials unless there is a finding by TDOT that such placement is the most economical except that the designation of a mandatory site may be permitted based on environmental considerations, provided the environment would be substantially enhanced without excessive cost.

The designation of a mandatory material source may be permitted based on environmental considerations, provided the environment would be substantially enhanced without excessive cost. If at any time the use of a public agency owned site or material will increase the Federal cost of a project, FHWA will not participate in the funding for said project. FHWA will not participate even if the designation of the material would conserve other public funds.

Where mandatory borrow or waste sites will be permitted based on environmental considerations and which were discussed in the Environmental Impact Statements, such considerations may be used as the basis for subsequent PS&E public interest findings.

B. Use of More Cost Effective or an Emergency Contract Method

The purpose of this document is to establish the procedures and requirements to allow work to be added within a project based on more cost effective criteria or in the case of an emergency.

Code of Federal Regulations (23 CFR 635.204) dictates the contract method based on competitive bidding shall be used by TDOT for performance of work financed with Federal funds unless TDOT demonstrates another method is more cost effective or an emergency exists.

Emergency: An emergency is a situation that requires repair work, as provided for under the Federal Emergency Relief (ER) Program (23CFR688.105(i)), or when a major element of segment of the highway system has failed and the situation is such that competitive bidding is not possible or is impractical. Competitive bidding under such circumstances may not be possible or may be impractical because immediate action is necessary to minimize the extent of the damage, protect remaining facilities, or restore essential travel.

All projects shall utilize a competitive bidding contract method unless the proposed project will be more cost effective with the use of another contract method, or an emergency exists.

If a more cost effective contract method or an emergency requires an alternative contract method be utilized, a public interest finding (PIF) must be submitted to Headquarters Construction. The request shall include the following:

1. Clearly identify the cost savings or emergency justifying the use of another contract method (bid tabs, cost analysis, AUP, etc.)
2. Identify the kinds of work to be performed
3. Identify the method to be used
4. Explain the estimated costs and the estimated Federal Funds to be provided
5. Explain the reason or reasons the emergency exists or the reasons that force account for such project is considered cost effective

C. Procedures for Use of Publicly Owned Equipment

The purpose of this document is to establish the procedures and requirements to use publicly owned equipment on projects with federal funds.

Code of Federal Regulations (23 CFR 635.106) prohibits the use of publicly owned equipment on projects using federal funds. Publicly owned equipment should not normally compete with privately owned equipment on a project unless the use of publicly owned equipment is warranted and justified.

The TDOT approval process must be completed in accordance with the procedures and guidelines established

State projects shall not authorize the use of publicly owned equipment unless necessary and justifiable. When it is necessary, the following procedures must be adhered to:

1. The proposed use of publicly owned equipment is clearly set forth in the Plans, Specifications, and Estimates submitted to Headquarters Construction for approval
2. The advertised specifications specify the items of publicly owned equipment available for use by the successful bidder, the rates to be charged, and the points of availability or delivery of the equipment.
3. The advertised specifications include a notification that the successful bidder has the option either of renting part or all of such equipment from the State or local public agency or otherwise providing the equipment necessary for the performance of the contract work.

The State or local public agency shall not profit by renting equipment at the expense of Federal funds.

If unforeseeable conditions require the use of publicly own equipment, the Contractor and State agreed upon rental rate shall not serve as a basis for any increase in the cost of the project on which Federal funds are to participate.

When publicly owned equipment is used on projects constructed on a force account basis, costs may be determined by agreed unit prices or an actual cost basis. When agreed unit prices are applied to the equipment, rental rates or itemized rates will not be required in the estimate. If utilizing an actual cost method, submit the schedule of rates proposed, exclusive of profit for the publicly owned equipment to Headquarters Construction for approval.

If the use of publicly owned equipment is necessary and justifiable, a Public Interest Finding (PIF) must be submitted to Headquarters Construction for approval. The following information may be included in the PIF:

1. Describe how the use of publicly owned equipment will benefit the public
2. Demonstrate the proposed use of publicly owned equipment is more cost-effective than meeting the requirement
3. Provide documentation showing any potential bidders are aware of the availability of the publicly owned equipment including the rates to be charged
4. Demonstrate the use of publicly owned equipment does not provide a profit to the public agency
5. Demonstrate the use of the publicly owned equipment does not raise the cost of the proposed or current project.

CIRCULAR LETTER

SECTION: **104.04 MAINTENANCE OF TRAFFIC**
NUMBER: **104.04-01**
SUBJECT: **LANE/STRUCTURE WIDTH RESTRICTIONS**
DATE: **MARCH 1, 2024**

When routing trucks and/or oversize traffic around or detouring through a work zone, the Team Lead shall advise the District Manager, Regional Operations Office, and the Oversize & Overweight Permit Office approximately two weeks prior to the hard barrier restriction of lane width and/or closing of a structure on the State or Interstate Highway System. Soft barrier restrictions would not fall under the notice. This will allow the Regional Operations Office and the Oversize & Overweight Permit Office ample time to make advisements of the lane restrictions. Once the restriction or closure has terminated, the Team Lead shall again advise the Regional Operations Office and the Oversize & Overweight Permit Office.

The Field Office personnel will be responsible for completing and submitting the Structure-Lane Width Restriction Form and a location map to the Oversize & Overweight Permit Office at the email address shown on the form. A copy will also be submitted to the Regional Operations Office.

The lane width restriction shall also be entered into SWIFT. Once the restriction has ended, the Field Office personnel will be responsible for submitting the Structure-Lane Width Restriction Form again to notify of the restriction termination end date.

The Oversize & Overweight Permits Office may be reached at the following address:

Tennessee Department of Transportation
Suite 800 James K. Polk Building
505 Deaderick Street
Nashville, TN 37243-0331
Phone: (615) 741-3821

Send to:

Tdot.permitoffice@tn.gov

615-532-9289

☐ **STRUCTURE RESTRICTION**

☐ **LANE WIDTH RESTRICTION**

REGION/DISTRICT INFORMATION:	
Project Supervisor:	
Address of Office:	
Phone Number:	
PROJECT INFORMATION:	
Contract Number:	
Project Number:	
County:	
LANE CLOSURE:	
Date:	
Route:	
Log Mile:	
RESTRICTION INFORMATION:	
Date:	
Horizontal:	
Vertical:	
RESTRICTION TERMINATED:	
Date:	

Send to:

Tdot.permitoffice@tn.gov

615-532-9289

CIRCULAR LETTER

SECTION: **104.11 VALUE ENGINEERING CHANGE PROPOSAL**
NUMBER: **104.11-01**
SUBJECT: **VALUE ENGINEERING CHANGE PROPOSAL (VECP)**
DATE: **June 7, 2024**

The purpose of this Circular Letter is to establish requirements for the proper submittal and approval of Contractor **Value Engineering Change Proposals (VECP).**

Unless otherwise directed, a Contractor may submit a VECP on any project as long as the total estimated savings is greater than $25,000. VECP's that propose a total savings of less than $25,000 (twenty-five thousand dollars) will normally not be considered unless there are other non-monetary savings or benefits to be realized.

All VECP's must be reviewed by the appropriate TDOT Divisions to assure all original design, structural, environmental, geotechnical, safety, etc. intentions are not compromised. The VECP form shall be completed with each VECP submittal to verify acceptability with the appropriate Divisions. See "EXAMPLE" of form on page 2.

It will be the responsibility of the Headquarters Construction Division to assure all Category 1 Change Orders for VECP are acceptable by the applicable divisions (and FHWA when applicable), Category 2 Change Orders shall be submitted to District Office, and Team Leads to assure the appropriate Divisions (and FHWA when applicable) accept the VECP for Category 3 Change Orders.

Before any VECP "Concept" or VECP is to be considered, the Contractor must provide all the minimal information required in the specifications.

Contract bid unit prices shall be carefully reviewed. Any prices exceeding average prices by more than 10% should have sufficient data and calculations supporting the increased prices.

The Contractor and TDOT will split the actual net savings. The actual savings will be determined when all the work outlined in the VECP and Change Order is completed, and final quantities are known. The quantities of other items not in the Change Order that change as a result of the VECP shall be considered in the actual savings calculation. The contractor shall be paid 50% of the actual savings only when all the VECP work is completed.

In accordance with standard specification 104.11, any VECP's that result in an increase greater than the original contract amount will be paid at a rate of 50% of the contract prices for all costs above the original contract amount.

VECP form

EXAMPLE

Contract No.: CNE 520	**Project No.:** 40172-4585-04
Date Submitted: July 4, 2006	**County:** Washington
Contractor: Uncle Sam Grading Co.	**Estimated Savings:** $ 67,000
Project Description: The grading and paving of U.S. 76 from East of Atlantic Ave. to Pacific Coast Rd.	
VECP Description: Revise the drainage plans to replace the 6'x4' box culvert at STA 17+76 and STA 20+06 with a 72" RCP-Class III pipe, and the 45"X73" arch pipe with a 60" RCP pipe at STA 25+50	

Review needed	Division	Acceptable	Reviewed By:	Date:
YES	**Region Preconstruction**	**YES NO**	Alfred E. Newman	July 12, 2006

Comments: VECP is satisfactory as submitted

Review needed	Division	Acceptable	Reviewed By:	Date:
YES	**Structures/ Hydraulics**	**YES NO**	Howdy D. Doody	July 13, 2006

Comments: New pipe sizes are satisfactory as proposed with equivalent capacity

Review needed	Division	Acceptable	Reviewed By:	Date:
YES	**Environmental Division Director**	**YES NO**	Sierra P. Nevada	July 13, 2006

Comments: Will revise permit with TDEC to show new pipe sizes

Review needed	Division	Acceptable	Reviewed By:	Date:
NO	**Geotechnical Operations**	**YES NO**		

Comments:

Review needed	Division	Acceptable	Reviewed By:	Date:
NO	**FHWA**	**YES NO**		

Comments:

Review needed	Division	Acceptable	Reviewed By:	Date:
NO	**Maintenance/ Traffic**	**YES NO**		

Comments:

CIRCULAR LETTER

SECTION: **105.02 AS-BUILT PLANS**
NUMBER: **105.02-01**
SUBJECT: **AS-BUILT PLANS**
DATE: **MARCH 15, 2024**

All significant changes not included in a change order or plans revision shall be documented by the Team Lead and submitted to the appropriate stakeholders as well as the project file. A significant change would include, but not necessarily be limited to, pavement section thickness and/or width, utility relocations, drainage size and/or routing, rights-of-way, ITS, and structure modifications. If there is a question of the significance of the change, a final determination shall be determined by the District Manager.

The Team Lead will submit with the final records documentation advising if there were no significant deviations.

CIRCULAR LETTER

SECTION: 105.06
NUMBER: 105.06-01
SUBJECT: REQUIRED NOTIFICATIONS
DATE: MAY 17, 2024

NOTIFICATION TO CONTRACTOR:

Notification of the Pre-construction Conference to the Contractor should contain:

1. An emphasis that project level supervisors need to be in attendance. The Contractor's EPSC representative should attend as well.
2. The Contractor is to notify all subcontractors of the date, time, and place soliciting the attendance.

NOTIFICATION TO LOCAL OFFICIALS:

Local Officials are to be notified in writing of the proposed schedule of construction before work is started on any facilities that may fall within their jurisdiction. If desired by said officials, a meeting could be scheduled to fully apprise them of the impact of the proposed construction.

The Tennessee Highway Patrol and/or local law enforcement shall be invited to the Pre-construction Conference on all projects on the interstate system.

On projects where multiple parties are involved (i.e., Railroads, utility companies, other DOT personnel, etc.), all parties should be notified at least one week prior to the Pre-construction Conference.

The Department will document the notification requesting Railroad attendance in the project file.

NOTIFICATION TO CONTRACTOR CONCERNING ARCHAELOGICAL CERTIFICATION OF WASTE AND BORROW SITES:

The Contractor shall be notified at the Pre-construction Conference to obtain an archaeological certification for any exclusive waste and/or borrow site located outside the project rights-of-way, in accordance with 107.06 of the Specification and the Waste and Borrow Manual. The certification shall be obtained and a copy forwarded to the Team Lead prior to the movement of any material from or to the site.

The Contractor shall make the request for certification at the following address:
Section.106@tn.gov

And shall include the following information:

1. The County where the project is located.
2. Project and Contract Number, including the description of the project.
3. Name and address of the Contractor

Jennifer Barnett
Tennessee Division of Archaeology
1216 Foster Ave.
Cole Building 3
Nashville, TN 37243

PRECONSTRUCTION NOTICES AND STARTING NOTICES SHALL BE SENT TO:

Director of Construction
TDOT.HQConstNotices@tn.gov

District Manager

Regional Field Services (Mat. & Tests)
Regional Environmental Manager
Regional Preconstruction Roadway Design Office
Regional Safety Office

Compliance and Field Services Program
TDOT.Env.FieldServices@tn.gov

Materials & Tests Division
TDOT.MaterialsTests@tn.gov

Small Business Development Program Office
TDOT.DBE.Program@tn.gov

Program Operations Office
John.Kahle@tn.gov

Labor Standards Unit/Prevailing
Wage Commission
Rachel.Tate@tn.gov

Bureau of Workers' Compensation
Elizabeth.Cornicelli@tn.gov

Contract Payments Section
Ryan.Boling@tn.gov

CIRCULAR LETTER

SECTION: **105.07 COOPERATION WITH UTILITIES (RAILROADS)**
NUMBER: **105.07-01**
SUBJECT: **UTILITY RELOCATION PROCEDURES**
DATE: **MAY 15, 2024**

1. Utility relocations and adjustments are to be made in accordance with FHWA's FHPM 6-6-3-1 dated September 6, 1985.

2. Advise all utilities in writing at the preconstruction conference that work performed without prior notification to allow Department verification will not be reimbursed. Due to the fact that State Project Work within a railroad's rights-of-way must receive approval of the railroad being impacted by such project, and the fact that a railroad's rights-of-way is private property and must be treated as such, that in cases where work to accommodate such project has been performed by a railroad on a State Highway Project and/or State Managed Utility Relocation Project, and such work is performed for some reason without prior notification to the Department, the work performed shall be inspected and verified by the Construction Field Office and/or the Department's Railroad Inspection Office prior to any reimbursement to a railroad for such work. This letter should also include instructions as to how, where and when the Team Lead or representative may be reached.

3. Team Lead should emphasize the need for proper traffic control by the utility companies during construction. Closer monitoring by Field Office personnel of the utility companies is needed.

4. Team Lead should notify the Regional Utilities Office if assistance is needed in setting up proper records.

5. Team Lead should advise the utility companies in writing as to the need for inspection of all salvaged materials. These inspections will now be performed by the Field Office personnel.

6. When personnel changes are made Team Leads must ensure that new utility inspectors are aware of their job responsibilities and have all pertinent materials.

7. All utility/railroad activities are to be recorded daily on Form DT-0667 regardless of whether said relocations are reimbursable or not.

8. Plans should be reviewed and possible utility conflicts with proposed construction investigated. (Ex. Underground utilities and guardrail)

9. The District Office is to develop a system of periodic random review of each Team Leads utility relocation procedure to ensure compliance.

CIRCULAR LETTER

SECTION: **105.07 COOPERATION WITH UTILITIES**
NUMBER: **105.07-02**
SUBJECT: **CONSTRUCTION CONTRACTS AND CHANGE ORDERS INVOLVING UTILITIES**
DATE: **MAY 15, 2024**

Reference: Memorandum Dated August 9, 2021

After the award of a construction contract containing "Move In" utilities, the Program Development and Administration Division (Program Operations Office) will review the bid prices and costs of the various utilities and modify the funding based on the awarded bid. Upon completion of this review and funding modification, the Finance Division (Project Analysis) will notify the Utilities Division if the utility cost is more than the current utility deposit.

If additional funds are owed or the policy cap of $2.5 Million (TDOT Policy 340-07*) is exceeded, then an additional deposit will be required for the amount owed.

During construction of a project that includes "Move In" utilities, all Category 1 and Category 2 Construction Change Orders (CO's) that involve adding, revising, or deleting utilities must be analyzed and documented as stated below by the Regional Utilities Office with assistance from the Construction District/Field Office. This documentation is necessary to confirm all utility expenses are eligible for TDOT payment and the maximum amount specified in the TDOT Policy has not been exceeded. If it is determined that the utility owner owes money to TDOT, the Regional Utilities Office will notify the Headquarters Utilities Division so they can inform the utility owner of the money owed. TDOT should request written confirmation/acknowledgement of the money owed from an Authorized Representative of the utility owner. If the additional amount owed from the Utility owner is greater than $200,000, then a deposit will be required for the additional amount. The Project Analysis Section will invoice the Utility owner for the deposit/money owed. The change order is to be executed regardless of, and independent of, the receipt of any needed deposits.

The following documentation is to be provided by the Regional Utilities office with assistance from the Construction District/Field Office and shall be included with the supporting documentation with the Change Order:

1) What is eligible for reimbursement from the original "Utility Relocation Contract"**;
2) The original "estimated" utility amount shown in the "Utility Relocation Contract" including the percentages of "pro-rata share" and the actual contract amount (i.e., Awarded total) for all items for the specific utility;
3) Statement that the items in the change order do, or do not, include betterment;
4) The remaining amount eligible for reimbursement based on the actual contract amount, and amount of Change Order to show the "balance" of eligible expenses or estimated amount owed;
5) A revised Modified Utility Estimate System (MUES) Spreadsheet; and
6) Documentation that the utility owner has been notified of the additional costs that will be owed to TDOT, and confirmation if received.

A copy of each executed Change Order (Category 1, 2, 3, and 4) and supporting documentation shall be sent to the Program Operations Office and the Project Analysis Section by the Field Office for their records and to properly invoice the utility owner.

As the construction project progresses, the Project Analysis Section will issue invoices (bills) to the utility owner quarterly once the deposit amount has been exceeded and the utility owner owes the Department monies for the utility relocations. Upon completion of the project, the Project Analysis Section will issue a final invoice for amounts owed the Department or reimburse the utility owner for any overpayments made.

Example 1:

1) All water distribution pay items are eligible and 100% were on state rights of way.
2) Original estimate for the twenty-five (25) 795-xx.yy pay items was $1,206,855. Actual awarded amount for the 25 pay items was $1,479,685.
3) Change Order items x, y and z are for betterment***, all other items are revised quantities or added items. Total change order amount is $325,987.
4) The value of work allowed per TDOT policy is $2,500,000, and therefore the amount remaining for Chapter 86 eligibility is $1,020,315 ($2,500,000 - $1,479,685). Change Order items x, y, and z are Betterment items and the costs for the betterment portion is the responsibility of the utility. Betterment costs are $125,000. Therefore, the utility company will owe TDOT $125,000 and the remaining $200,987 ($325,987 - $125,000) is eligible for 100% state reimbursement.

Example 2:

1) All electrical distribution pay items are eligible for reimbursement. It was estimated that 75% of utilities were on state rights of way and 25% were on private easement****.
2) Original estimate for the thirty-seven (37) 790-xx.yy pay items was $3,400,206. Actual awarded amount for the 37 pay items was $3,429,685.
3) Change Order items are needed due to a plans revision that revised quantities and added items. The change order amount is $333,131, split 75/25%, or $249,848/$83,283.
4) Based on the original estimate in the Utility Relocation Contract, TDOT would be responsible for $850,051.5 ($3,400,206 x 0.25). The remainder $2,550,154.5 ($3,400,206 - $850,051.5) is eligible for Chapter 86 reimbursement. However, since the TDOT policy is $2,500,000 maximum, the utility made a deposit of $50,154.5 for the difference ($2,550,154.5 - $2,500,000).
5) Based on the actual awarded amount of the utility items, the amount TDOT would be responsible for $857,421.25 ($3,429,685 x 0.25). The remainder $2,572,263.75 ($3,429,685 - $857,421.25) would be eligible for Chapter 86 reimbursement, however, since the TDOT policy is $2,500,000 maximum, the utility would owe TDOT the difference $72,263.75 ($2,572,263.75 - $2,500,000). Since a deposit of $50,154.5 was already made, the Utility still owes TDOT $22,109.25, the difference of $72,263.75 and $50,154.5.
6) Therefore, since the maximum amount of reimbursable costs has been exceeded, the utility owes TDOT the amount of the Change order not represented by private easement (75%), $249,848, and the deposit difference of $22,109.25, for a total amount owed of $271,957.25.

* TDOT Policy Number 340-07, Utility Relocations from Public Highway Rights-of-Way Under TCA 54-5-804, identifies "Qualified" and "Non-qualified" projects and the limitations for reimbursement. Reimbursement for relocations on public rights of way is capped at $2.5 Million for each category of utility facilities.

** From the Standard "TDOT UTILITY RELOCATION CONTRACT" (page 1)

> WHEREAS, the Utility has furnished TDOT with an estimate, plans, and specifications showing the cost and manner of relocating these facilities, which estimate is in the amount of $ _____, including the amount of $ _____for the cost of engineering, which may be inclusive of preliminary engineering authorized on Month Day, Year, including the amount of $ _____ for the cost of inspection provided by the Utility, including the amount of $ _____ for the cost of betterment to the Utility's facilities (hereinafter called the "Betterment Cost"), and including the amount of $ _____for deposit for the utility work in the State contract, and of which _____ percent represents the pro-rata share to which the Utility is entitled to reimbursement for relocation of utility facilities located on private utility right-of-way, and _____percent represents the pro-rata share for relocation of utility facilities located on public highway right-of-way, reimbursement being for the cost of construction, engineering, and inspection on private utility right-of-way, but excluding inspection on public highway right-of-way, betterment, and the cost over the maximum TDOT reimbursement amount; and

*** Utility owners are responsible for 100% of betterment costs

**** TDOT is responsible for 100% of all relocation costs for utilities that are on private easement.

CIRCULAR LETTER

SECTION: **105.07 COOPERATION WITH UTILITIES (RAILROADS)**
NUMBER: **105.07-03**
SUBJECT: **RAILROAD/HIGHWAY GRADE CROSSING SAFETY PROJECTS**
DATE: **MAY 15, 2002**

The following procedures for project control and inspection for Safety Projects programmed under Section 203 and 230 of the 1973 Highway Safety Act and TCA 65-11-113 and 114 (Prefix RRP, RRO).

1. The Utilities Engineer will provide the District Operations Engineer with the approved plans and specifications, approved estimate of costs and agreement executed between Tennessee Department of Transportation and Railroad Company and approved by Federal Highway Administration.
2. The Regional Operations Engineer will assign a District Operations Engineer to represent the Bureau of Operations and work directly with the railroad. The project supervisor will be provided copies of material outlined in paragraph one above e.
3. The District Operations Engineer will hold a pre-construction meeting with railroad company representatives when he is notified they are ready to begin installation of signals to discuss the scope of work and establish the date the railroad is to begin work. Daily inspection of the work by the railroad will not be performed, instead, a close out or final inspection will be held by the regional construction supervisor and the project supervisor with the railroad company to insure that the signals and related equipment have been installed in accordance with approved plans and specification and that required signing and markings have been installed by the Maintenance Division or local Government. Any extraordinary problems encountered by the railroad that will increase the cost of the project shall be discussed at this time, and an explanation written by the project supervisor for attachment to the railroad's invoice.
4. The District Operations Engineer will be required to endorse the railroad billing to the effect that work has been completed in accordance with approved plans and specifications.
5. These railroad billings will be handled for audit and payment as other railroad and utility bills. Final bills are not to be approved unless <u>all</u> work has been completed.
6. Upon project completion the attached form is to be filled out and transmitted to those individuals noted. On projects consisting of both signals and crossing work, completion notices are to be submitted only after <u>all</u> work is finished. On notices for projects consisting of signals only "N/A" is to be entered for the crossing pad.

Use of these procedures is limited to projects for the installation of flashing light signals and/or related highway markings and signing not a part of a highway construction project. Railroad adjustments and installation necessary to accommodate highway construction projects will be handled as they have been, and will be subject to inspection and record keeping as other utility adjustments.

CIRCULAR LETTER

SECTION: **105.07 COOPERATION WITH UTILITIES**
NUMBER: **105.07-04**
SUBJECT: **UTILITY DIARIES AND INSPECTION PROCEDURES**
DATE: **MAY 15, 2024**

On all projects requiring utility relocations, Form DT-0667 "Project Utility Diary" is to be used to document said relocations whether the work is reimbursable or not. When a utility is relocating at its own expense or under a lump sum reimbursement contract, the "Description of Work Performed" section will be the only notation required. The notation shall indicate if the relocation is a non-reimbursable or lump sum reimbursable contract.

1. Form DT-0667 is to be completed in the field by the utility inspector.
2. The Form should be distributed to the TDOT Field office, the utility company, and retained in the project file.

If the utility relocation is included in the state contract, the utility will be responsible for inspecting all phases of the relocation, per TCA 54-5-804, 2003 Public Chapter 86. The TDOT inspector shall document the utility work activities performed in the daily project diaries. The inspector provided by the utility company will:

1. Complete Form DT-0667 as described above and submit it each estimate period, as directed by the Team Lead. Along with the item descriptions, the inspector will include the quantities and stations of installed items.
2. Complete "Installed Item Certification" portion of Form DT-1716 and submit it each estimate period, as directed by the TDOT Team lead. This form will be signed to certify that the items installed during that estimate period met all applicable specifications.
3. Complete and attach Form DT-1716A to DT-1716 and submit it each estimate period, as directed by the TDOT Team Lead. This form will be used to summarize, by project number, the utility items installed during that estimate period. The TDOT inspector shall sign Form DT-1716A after ensuring it is consistent with the utility diaries and daily project diaries. The completed Form DT-1716A shall be referenced in the progress pay quantity documentation.
4. Complete "Final Acceptance of Work" portion of Form DT-1716 and submit it to the TDOT Field office when the utility relocation work is complete.
5.

PROJECT UTILITY DIARY
UTILITY ITEM CERTIFICATION/ACCEPTANCE – DT-1716
SUMMARY OF INSTALLED UTILITY ITEMS – DT-1716A

PROJECT UTILITY DIARY

CONTRACT NO:_____ RECORDED BY:_____ UTILITY COMPANY_____

PROJECT NO:_____ PROJECT ENGINEER_____ UTILITY CONTRACT NO._____

REF. NO:_____

DATE:_____

UTILITY REPRESENTATIVE:_____

(For "Work Order" Reimbursable Projects)

DESCRIPTION OF WORK PERFORMED

LABOR

NAME	CLASSIFICATION	HOURS

LABOR USED TO RESTORE RECOVERED MATERIAL TO SUITABLE CONDITION FOR REUSE SHOULD BE INCLUDED ON THIS REPORT.

MATERIALS REMOVED

ITEM	U.S.	QUANTITY

IF BOTH PARTIES AGREE THAT MATERIAL IS NOT SALVAGEABLE, A CHECK IS TO BE ENTERED IN THE U.S. COLUMN

MATERIALS USED

ITEM	QUANTITY

TRANSPORTATION AND EQUIPMENT

TYPE	HOURS	MILES

REV: 7/17

UTILITY ITEM CERTIFICATION/FINAL ACCEPTANCE

Contract Number: _____ **Utility Company:** _____

Project Number(s): _____ **Utility Inspector:** _____
Print

_____

County(ies): _____

_____

Instructions: Please check appropriate box (or boxes) and fill out required information. For **Installed Item Certification**, attach **Summary of Installed Utility Items** sheet(s) for each project number and submit each estimate period as directed by the TDOT District Operations Supervisor**.**

☐ **Installed Item Certification**

On behalf of the above utility company, I certify that the materials used for the item(s) listed on the following page(s) meet and were installed in accordance with all applicable specifications. Any pertinent shop drawings or engineering changes have been approved.

Estimate Period: _____ **to** _____

_____ _____
Utility Inspector Signature **Date**

☐ **Final Acceptance of Work**

I certify that the utility relocation work is complete and is accepted by the above utility company.

_____ _____
Utility Inspector Signature **Date**

SUMMARY OF INSTALLED UTILITY ITEMS

Contract Number: _____ **Utility Company:** _____

Project Number: _____ **Utility Inspector:** _____
Print

County: _____ **TDOT Inspector:** _____
Signature

Estimate Period: _____ **to** _____

Item Number	Description	Unit	Installed Quantity

Page _____of _____

DT-1716A
7-14-17

CIRCULAR LETTER

SECTION: **105.07 COOPERATION WITH UTILITIES (RAILROADS)**
NUMBER: **105.07-05**
SUBJECT: **CSX RAILROAD**
DATE: **MAY 15, 2024**

In order to finalize handling and updating records concerning overpass projects, CSX Transportation, Inc. would like to be advised of the final inspection date in order to participate if desired.

They also wish to be advised in writing, as to the date the structure was completed and opened to traffic.

In order for the Structures Division to certify "As Built" clearances, upon completion of the structure the Team Lead shall request the Regional Bridge Inspection to conduct his initial inspection of the bridge.

Correspondence relative to the above should be directed as follows with copies to appropriate Department personnel:

Mr. Todd Allton
Project Manager II Public Projects GA, SC, TN
CSX Transportation
1590 Marietta Blvd NW
Atlanta, GA 30318
O. 404.350.5134
F. 904.245.3183
E. Todd_Allton@csx.com

CIRCULAR LETTER

SECTION: **105.07 COOPERATION WITH UTILITIES (RAILROADS)**
NUMBER: **105.07-06**
SUBJECT: **RAILROAD FLAGGING SERVICES**
DATE: **JANUARY 1, 2010**

The railroad flagging services for certain projects will be paid by the Department effective for the December 3, 1993 letting. The payment, when required, for flagging services will be specified by Special Provision 105C. The Department will pay for all verified flagging required up to the number of specified flagging days stipulated in Special Provision 105C. The Special Provision states that the Contractor and the Department shall sign the Railroad's time sheets in order to verify the presence of the flagman for a particular day. The Engineer's verification of the time sheets should check for the need of a flagman on a particular day, confirm that the contractor has provided proper notification for the presence of a flagman and confirming the actual flagging hours as noted in the Special Provision. **At all times and in all cases, the Railroad reserves the right and authority to determine when, where and if flagging services are required on a State Highway Project.** Flagging services for work that is not required by the contract (temporary crossings, etc.) will not be paid by the Department. The Utilities section will receive and forward all billing information to the Project Engineer for verification. The payment to the Railroad for flagging will be the responsibility of the utilities Section. However, if the days of flagging services required extend beyond the number of days allotted, the costs of such additional flagging shall be deducted from the Contractor as specified in the Special Provision. The Project Engineer shall make this deduction when he receives the billing information from the Utilities Section. This deduction should be clearly defined in the billing information.

In addition, on projects where the flagging will be paid by the Department, a final inspection in accordance with Subsection 105.13 of the Standard Specifications shall be made for the work that is within the limits of the Railroad. This inspection shall include a representative of the Railroad and once the work is accepted the Railroad shall sign the attached completion notice on the date of final inspection. It is imperative that this inspection is documented because the Railroad has 365 days after this date to submit all billing that is reimbursable by the Department.

Date: _____

Utility Manager
Utilities Section
600 James K. Polk Building
Nashville, TN 37219

Re: Completion Notice of Work within the limits of the Railroad

Federal Project No. _____

State Project No. _____

County _____

Dear Sir:

This notice is to confirm the acceptance of all work within the limits of the Railroad in accordance with Subsection 105.13 of the Standard Specifications.

Date of Railroad Inspection _____

Inspected by Railroad Representative _____

Inspected by D.O.T. Representative _____

Sincerely,

Project Supervisor

cc: Regional Construction Supervisor
Railroad
Contractor
Director of Construction
Finance Office

CIRCULAR LETTER

SECTION: **105.07 COOPERATION WITH UTILITIES**
NUMBER: **105.07-07**
SUBJECT: **FINAL INVOICES FROM UTILITIES AND RAILROADS**
DATE: **MAY 15, 2024**

In order to enforce the timely receipt of final invoices from Utilities and Railroads for their work performed on highway construction projects, Team Leads are hereby advised to notify the appropriate Regional Utilities Office of the date the Utility or Railroad work was completed on the project immediately following completion of said work. Once the Regional Utilities Office is notified of the completion date, the Utility or Railroad will be notified that a final invoice for the work performed is needed. This will be identified as the official beginning of the one-year time limit for reimbursement which will be monitored and enforced.

CIRCULAR LETTER

SECTION: **105.07 COOPERATION WITH UTILITIES**
NUMBER: **105.07-08**
SUBJECT: **CONSTRUCTION UTILITY COMPLIANCE/NON-COMPLIANCE WITH UTILITY CONTRACT**
DATE: **JULY 12, 2018**

TCA 54-5-804 Allows for TDOT and Utility Companies to enter into a contract to move utility facilities which are in conflict with TDOT Construction Projects.

During the development of Right-of-Way plans, the Utility Division begins the process of utility coordination with all Utilities that will be affected by the proposed construction project. There are several steps that the Utility must take regarding reimbursement and some Utilities may decide to relocate prior to construction, at no cost to the State.

For those who do request reimbursement, TDOT will enter into one of the following types of contracts:

- Percentage Contract (Move Prior or Move in State Contract) %Public/% Private
- Chapter 86 Move Prior
- Chapter 86 Move in State Contract
- Easement Replacement
- Pipelines (special contracts for transmission pipelines)

For <u>all</u> Move Prior Contracts, the Utility is responsible for:

- Notifying TDOT Construction (Project Supervisor or Regional Construction) of the intended date to begin utility relocation construction no less than 3 days prior to beginning work
- Surveying (including, but not limited to staking the ROW)
- Clearing and grubbing (must have TDOT authorization)
- Coordinating the relocation
- Constructing the relocation
- Providing all environmental permits (Notice of Coverage, etc.)
- Providing environmental inspection as required by permits
- Providing EPSC
- Disposing of waste
- Traffic Control
- Providing utility easements
- Meeting Buy America requirements
- Moving all utility services prior to the letting date of the construction contract (proposed letting date provided to utility in the Go-to-Work Authorization)
  NOTE: This only applies to Chapter 86 projects move prior to letting date. All contracts are subject to the approved Schedule of Calendar Days.

Once the Utility has completed the Chapter 86 Move Prior work, in order to receive reimbursement, the Utility must submit:

1. Invoice to the Regional Utility Office
2. Contract Obligation Certification to both the Project Supervisor and the Regional Utility Office

The Project Supervisor has three options when signing the Contract Obligation Certification:

1. Accepting Certification as submitted.
2. Accepting Certification pending Final Verification by project staking: the Utility will not be reimbursed until Construction work begins and project staking has verified that the Utility has been relocated in accordance with the approved Utility plans.
3. Denying Certification as submitted with documented reasons.

The Regional Utility office will not pay for the relocation until receipt of approval from the Project Supervisor (approval of the invoice and a signed Contract Obligation Certification).

Schedule of Calendar Days Violations – ALL Utility Relocation Contracts

When the Utility fails to complete work within the approved schedule of calendar days, creating a conflict or delay to the construction project, TCA 54-5-854 (h)(1)(A) allows for TDOT to collect a civil penalty from the Utility Owner.

To enforce the civil penalty, due process must be provided. To fulfill that requirement, notification must be provide to the utility that they are considered to be in violation, and provide a deadline date for the utility to take corrective action.

It should be noted that if the Project Supervisor signed the "Certification Contract Obligation" signifying that the utility met its obligation to Move Prior, it will severely limit the ability to enforce the utility fine for delays to the project.

The Project Supervisor will be the lead as the project site authority who determines the utility is causing delays as a result of the state of non-compliance, and as the authority on site to coordinate the work necessary to rectify the deficiencies. If the Field Office has a consultant Utility Coordinator assigned to the project, that firm may be the Project Supervisor representative for the following actions:

1) TDOT Construction Project Manager notifies the Utility of issues. The Project Supervisor determines that there is a delay as a result of the required utility relocation construction. As a general course of business, the Project Supervisor should communicate to the utility representative of record or the utility site foreman/supervisor that the utility relocation is causing delays to the project. Any documentation detailing correspondence, oral discussions, meetings, or other efforts to notify the utility of the issues should be collected and entered into a record of the proceedings related to the utility compliance.

2) **TDOT Construction notifies Regional Utility Office of utility issues.** The Project Supervisor should notify the Regional Utility Office of the issues, and they can assist in providing proper contact information, documentation of coordination including the contract, schedule of calendar days, authorization Put To Work date, and may be able to assist in communications between the utility management and the Project Supervisor to resolve the issues. The Project Supervisor should have available the Schedule of Calendar days and the Utility Put To Work authorization which is in the package provided by the Regional Utility Office to the Project Supervisor at the preconstruction meeting. The Put To Work authorization is the beginning date of the Schedule of Calendar days, which will designate the number of calendar days approved for the utility relocation. The Regional Utility Office can be requested to assist the Project Supervisor in making that assessment.

3) **TDOT Construction arrange meeting with Utilities to discuss issues.** The Project Supervisor will convene a meeting with all representatives of utilities on the project, along with the State Contractor. The Regional Utility Office can be requested to attend to provide any support the Project Supervisor may need. With all the stakeholders in attendance, any issues raised regarding the relocation for the utility that is not in compliance can be addressed at the meeting with all stakeholders present. The meeting will determine a deadline date for the utility to complete the relocation necessary for the State Contractor to proceed without delay.

4) **TDOT Construction issues written summary of meeting setting deadline or Utility to comply, citing TCA 54-5-854(h).** Minutes of the meeting will document the issues, discussions, and the deadline date for the utilities identified to come into compliance. TCA 54-5-854(h) is to be cited as the consequences if the utility does not comply by the deadline. (See sample letter) The Project Supervisor should contact the Regional Utility Office to obtain the current contact information for the utility. Generally the Project Supervisor will, up to this point, be communicating with the Utility representative or foreman on site. To provide proper notification, the Project Supervisor will need to send the letter to the utility management via verified mail receipt along with the minutes of the meeting. This eliminates any defense that the utility management was unaware of the pending action.

5) **TDOT Construction notifies Regional Utility Office if deadline is not met.** On the date of the deadline, if the utility is not in compliance, it has not completed the work discussed and documented in the meeting minutes, the Project Supervisor will transmit a request to the Regional Utility Office to proceed with actions to fine the utility per the state statute.

6) **Regional Utility Office reviews and submits documentation to HQ Utility Office.** The Regional Utility Office, being familiar with the issue and actions taken by the Project Supervisor, will review and if appropriately documented, place the documentation on FILENET, and electronically submit the approved request to the HQ State Utility Coordinator and their assistant for the region as soon as practical.

7) **HQ Utility Office reviews and submits to TDOT Legal Office for action.** HQ assistant will review, and if appropriately documented, submit the request to the TDOT Legal Office recommending that action be taken to fine the utility per state statute TCA 54-5-854(h). The Legal Office will send the owner written intent to assess a civil penalty per TCA 54-5-854(h)(4).

Standard Forms:

Utility – Standard NOV Letter

Utility – Certification Contract Obligation

Certification Contract Obligation

Date: _____

TDOT Region ____ Construction Office
Region

Attn: _____, Project Engineer
Address _____

_____
(Information is provided on the Utility Begin Work Authorization letter)

PROJECT#/S: _____ **COUNTY/S:** _____
_____ _____

FEDERAL: _____ **PIN #:** _____
DESCRIPTION: _____
UTILITY CONTRACT: #_____

The utility completed on _____ **(date of completion) the utility relocation in accordance with the approved relocation plans for the above referenced project number prior to the date specified and in accordance with the executed contract referenced.**

NOTE EXCEPTIONS:
Maintaining services to business and/or residences is attached.

Signature indicates this individual has the legal authority to sign contracts and agreements to obligate the utility

Signed: _____ Date: _____
Utility representative

Print Name: _____

Title: _____

Utility Name: _____

Address: _____

City, State, Zip: _____

Phone Number: _____

Fax Number: _____

E-Mail: _____

Utility Type:
- ☐ Water
- ☐ Sewer
- ☐ Power
- ☐ Gas
- ☐ Telephone
- ☐ CATV
- ☐ Other:_____

_____

TDOT USE ONLY: ☐ This Certification letter is accepted

☐ This Certification letter is accepted pending Final Verification by project staking.

☐ This Certification letter is not accepted. Reason: _____

_____

_____

Signed: _____ **Date:** _____
TDOT Construction office representative

CC: TDOT Construction Project File
TDOT Regional Utility Office

CC: **Utility's File**
TDOT Regional Utilities Office

Certification Exceptions:

The following business and/or residences on proposed State right-of-way have not been vacated at the time of the relocation, and utility services are being maintained temporarily. Upon written notice to the utility contact listed below, the utility will relocate the services indicated within the period of time specified. The State may retain final payment until the utility fulfills this obligation.

State Proj. Tract No.	Type of Occupied property (Residence / Business)	Type of Utility Service (water,sewer,gas, electric,CATV)	Address (Of occupied residence / business)	Period of time utility obligates to remove facility (Calendar days)
				days
				days
				days
				days
				days
				days
				days
				days
				days
				days
				days
				days
				days
				days
				days

Date

Anywhere Utility District
P. O. Box 1234567
Highway
Chattanooga, TN 37422

RE: **NOTICE OF VIOLATION**
Waterline Relocation
TDOT Project # 33333-2222-04

Dear Mr. Doe:

It has been brought to my attention that **Anywhere Utility District** is in violation of TCA 54-5-854. Your utility is being put on Notice that the follow violations have been made:

1. The approved "Schedule of Calendar Days" has been exceeded and your utility's facility relocations are not completed.
2. Your utility has never submitted a monthly progress report to the Department per state statute TCA 54-5-854(h)(3).
3. Your utility has not undertaken its relocation as originally approved by the Department.

Should these issues not be resolved on or before **Date**, the Department will proceed with its highway construction without liability for damage to **Anywhere Utility District's** facilities pursuant to TCA 54-5-854(g). Additionally, a civil penalty up to five hundred dollars ($500) for each day after the scheduled completion date that you fail to complete the required relocation could be imposed. Hopefully, these issues can be resolved. We look forward to working with you to solve these problems.

Sincerely,

Project Supervisor
TDOT Region X Construction Office

Cc: Regional Utility Office
Regional Operations Director
Regional Operations Engineer
Project File

CIRCULAR LETTER

SECTION: **105.07 COOPERATION WITH UTILITIES (RAILROADS)**
NUMBER: **105.07-09**
SUBJECT: **RAILROAD FLAGGING SERVICES (NORFOLK SOUTHERN RAILWAY)**
DATE: **JUNE 1, 2023**

For projects that take place on or adjacent to the Norfolk Southern Railway Company (NS) right-of-way and/or have the potential to foul the Railroad's track or operations, the flagging services shall be furnished and maintained by the Contractor as required by the NS. The payment for services, when required, will be specified by Special Provision 105C(SP105C). The Department will pay for all verified services required up to the number of specified days stipulated in SP105C. The Engineer should verify the need for the services on a particular day, confirm that the contractor has provided proper notification for the presence and confirmed the actual services as noted in the SP105C. Services for work that is not required by the contract (temporary crossings, etc.) will not be paid by the Department. No payment will be made to the Contractor for costs of services that are required in excess of the allotted days stipulated in SP105C.

In addition, on projects where the flagging will be paid by the Department, a final inspection in accordance with Subsection 105.13 of the Standard Specifications shall be made for the work that is within the limits of the Railroad. This inspection shall include a representative of the Railroad and once the work is accepted the Railroad shall sign the attached completion notice on the date of final inspection.

SP105C stipulates the following information for:

8. CONTRACTOR PROTECTIVE SERVICES

1. Qualified protective services are those services of a contractor, directly hired by the Prime Contractor, that have been vetted through the Railroad and are allowed to be performed on Railroad property.
2. Contractor Protective Services shall be onsite anytime construction activities are taking place on or adjacent to the Railroad Property and/or have the potential to foul the Railroad's track or operations.
3. Contractor Protective Services shall be those services of a subcontractor to the Contractor who have the ability to fully protect the Contractor's workers and machinery once the qualified protective services contractor confirms the Contractor Protective Services are properly equipped and site specific trained by the Railroad Representative. Contractor Protective Services may act as an observer until such Contractor Protective Services are site specific trained by the Railroad Representative. The reference to an "observer" is defined as a person who has the authority to deny access to Contractor's workers and machinery to a specified Railroad operation zone as directed to the qualified protective services contractor by Railroad and prevent those potential to foul work events which may put the Contractor's workers and machinery at risk for injury or damage.
4. Contractor Protective Services will not be allowed on the property until all items on the Norfolk Southern Checklist for Construction- Direct Hire have been completed and the authorization to proceed is given by the Railroad Engineer.
5. Under the terms of the agreement between the Sponsor and the Railroad, the Railroad has sole authority to determine the need for any Railroad Protective Services required to protect its operations or work designated to be done by the Railroad through the force account estimate.

Date: _____

Utility Manager
Utilities Section
600 James K. Polk Building
Nashville, TN 37219

Re: Completion Notice of Work within the limits of the Railroad

Federal Project No. _____

State Project No. _____

County _____

Dear Sir:

This notice is to confirm the acceptance of all work within the limits of the Railroad in accordance with Subsection 105.13 of the Standard Specifications.

Date of Railroad Inspection _____

Inspected by Railroad Representative _____

Inspected by D.O.T. Representative _____

Sincerely,

Project Supervisor

cc: Region Construction
Railroad
Contractor
Director of Construction
Finance Office

CIRCULAR LETTER

SECTION: **105.11 INSPECTION OF WORK**
NUMBER: **105.11-01**
SUBJECT: **TDOT INSPECTION RESPONSIBILITIES ON LOCAL PROGRAMS PROJECTS**
DATE: **MAY 22, 2024**

In accordance with the TDOT and FHWA Stewardship Agreement, for Local Agency Projects:

> "TDOT is responsible for assuring that all Federal-aid projects administered by local agencies comply with all applicable Federal and State requirements. TDOT is not relieved of this responsibility even though the project may be delegated to the local agency. In accordance with 23 CFR 1.11, TDOT is responsible for ensuring that the local agency is qualified and equipped to administer the project and has processes in place to ensure compliance with federal requirements."

In order to assure adequate construction and materials acceptance and testing, TDOT will have an active oversight responsibility in the pre-construction and construction of these local projects.

The District Manager will assign a **TDOT representative** to participate in the project pre-construction meeting, to conduct routine project reviews, to attend quarterly progress meetings, and to participate in the final inspection as required in the Oversight and Frequency table below. When TDOT is conducting the routine project review and final inspection, the **Local Government Representative** responsible for the project shall be present. It is also preferable that the CEI be present during the reviews. The TDOT representative shall assure the quality of construction, completion of contract requirements, and project record keeping are satisfactory.

Required oversight and frequency (note these are minimum frequencies and more inspections may be needed if problems persist):

Project Amount	Pre-construction meeting	Project Reviews/Inspections during construction	Final Inspection
< $250,000	Required	Required- 1 inspection minimum	Required
$250,000 - $2,000,000	Required	•Duration < 4 months- Recommend 1 per month, but must do at least 1 •Duration 4-8 months, recommend 1 per month, but must do at least 3 inspections at least 1 month apart • Duration > 8 months, Required every 4-6 weeks	Required
>$2,000,000	Required	Required 1 per month minimum.	Required

To document TDOT's oversight activities, the Local Programs Inspection form shall be completed during each project review. All findings, satisfactory or not, shall be documented in the inspection report. The inspector must document what was observed and its acceptability in the "comments" section (e.g. all certified payrolls were on file and wage rates comply with contract). It is required to attach supporting documentation when a negative finding is made. A closeout meeting with the Local Government Representative and CEI (if applicable) will be required to discuss the findings.

A **TDOT Local Materials and Tests Field Services representative** shall conduct all Independent Assurance testing on the local project in accordance with TDOT SOP 1-2.

The assigned **TDOT representative and Local Materials and Tests Field Services representative** shall work together and shall attend and participate in the mandatory preconstruction meeting to explain TDOT expectations. These TDOT representatives are the "eyes and ears" for TDOT and must assure that the project is completed in accordance with the federal regulations just as though it is a TDOT project with federal funds.

The local entity and their CEI will have the day to day responsibility and authority for construction inspection and material acceptance.

The **TDOT Local Programs Office,** is responsible for project oversight on Enhancement Projects (except the construction of bicycle and pedestrian facilities) and buildings.

Additional inspection requirements and guidelines:

- As noted the Local Government Representative shall be present during the project review
- Once the review is completed, there shall be a close out meeting with the Local Government Representative and the CEI to discuss and explain the findings needing to be resolved and the expectations of TDOT. A copy of the completed inspection report should be distributed at that time, if not complete, a copy shall be provided as soon as available, preferably within 2 business days.
    - All findings should be resolved on the project site if possible.
    - Findings that cannot be resolved on the project site should be raised to the District Manager\. The Local Programs Office and Headquarters Construction should be used to resolve problems that cannot be resolved at the Regional level.

- The Local Government Representative will be responsible for responding, in writing, to the findings made in the inspection report. Corrective actions taken need to be documented.

Circular Letter

Section: 105.15
Number: 105.15-01
Subject: COMPLETION NOTICE DISTRIBUTION
Date: MAY 17, 2024

Regional Completion Notices shall be sent to the following either by Email or USPS mail:**

Contractor
Surety
District Manager
Director of Regional Operations
Regional Utilities Office
Regional Bridge Engineer
Regional Safety Office

Director of Construction	TDOT.HQConstNotices@tn.gov
Construction/Maintenance Contracts	Timothy.Colvett@tn.gov
Contract Payments Section	Ryan.Boling@tn.gov
Office of the Chief Financial Officer	Thomas.Naive@tn.gov
Roadway Design Division	TDOT.DesignFileRoom@tn.gov
Materials & Tests Division	TDOT.MaterialsTests@tn.gov
Structures Division	TDOT.Structures@tn.gov
Program Development & Scheduling Office	TDOT.Scheduling@tn.gov
Right of Way Division	TDOT.HQ.ROW@tn.gov
Environmental Permits	TDOT.Env.NPDES@tn.gov
Environmental-Ecology & Permits Office	Robbie.Stephens@tn.gov
Program Operations Office	John.Kahle@tn.gov
Program Operations Office	Bonita.Dunlap@tn.gov
Strategic Transportation Investments Division	Terry.Gladden@tn.gov
Long Range Planning Division	Matt.Meservy@tn.gov
Labor Standards Unit/Prevailing Wage Commission	Rachel.Tate@tn.gov

**The above listed contacts are the minimum individuals that completion notices must be sent to. Individual Regions may have others that request to receive this document and need to be added to their separate list of recipients.

CIRCULAR LETTER

SECTION: **105.16 REQUEST FOR EQUITABLE ADJUSTMENT (REA) AND DISPUTES**
NUMBER: **105.16-01**
SUBJECT: **REA PROCESS**
DATE: **AUGUST 21, 2023**

Supplemental Specification **104.03.C** states the Contractor will, upon request, have an opportunity to discuss the Contract change by informal meeting with the Department's Regional representatives associated with the change prior to the issuance of the Engineer's written response. If such a meeting is held, the Contractor shall use the opportunity to present relevant information and respond to any information provided by the Engineer or other Department officials with knowledge of the Work.

When a change is necessary, the Engineer will make appropriate adjustments to the Contract price and time, if warranted, in accordance with **108.07, 109.04, 109.05.A,** and **109.06.** If the Contractor disagrees with the Engineer's decision or does not agree with the Contract adjustments, the Contractor may pursue the issue as a Request for Equitable Adjustment in accordance with Supplemental Specification **105.16.**

104.03: Contract Change Notification

A. Written Notification by Contractor

B. Written Acknowledgement by Engineer (10 calendar days)

C. Written Response by Engineer

1. Contract Time > 180 days or
   Original Contract Amount > $200,000
   (30 calendar days)
   Involved with decision; District Leadership, Regional Leadership, HQ Construction Division, and other personnel as needed.
2. Contract Time > 90 days <= 180 days or
   Original Contract Amount > $100,000 <= $200,000 or > 10%
   (21 calendar days)
   Involved with decision; District Leadership, Regional Leadership, and other Regional personnel as needed.
3. Contract Time <= 90 days or
   Original Contract Amount <= $100,000 or <= 10%
   (14 calendar days)
   Involved with decision; District Leadership, and other Regional personnel as needed.

105.16: Request for Equitable Adjustment (REA) and Disputes

A. **Notice of Intent to File a REA** Submitted to Headquarters Construction

B. **Submission of REA** (60 calendar days)

C. **REA Informal Meeting** (30 calendar days)
Involved with meeting; District Leadership, Regional Leadership, HQ Construction Division, and other Divisions as needed.

D. **Department Decision** (60 calendar days)
Involved with decision; District Leadership, Regional Leadership, HQ Construction Division, and other Divisions as needed.

CIRCULAR LETTER

SECTION: **106 BUILD AMERICA BUY AMERICA ACT (BABA)**
NUMBER: **106.01**
SUBJECT: **BUILD AMERICA BUY AMERICA ACT**
DATE: **JANUARY 1, 2024**

Per Special Provision **106BA**, Contractors are required to provide certifications that materials to be permanently incorporated into the project meet Build America, Buy America requirements and are produced in the United States.

The contractor shall Provide certifications to the Engineer prior to using the products and/or materials on the project. Assure all submittals meet Build America, Buy America prior to the products and/or materials being incorporated in the project. Materials and Tests Division Standard Operating Procedures **(SOP) 1-8** lists materials by material code and should be used as a resource to verify certifications meet BABA requirements.

If the Contractor submits documentation for a product or material not listed in SOP 1-8, contact the Materials and Tests Division for assistance prior to using the product or material.

The Contractor shall be responsible for all cost associated with products that are permanently incorporated into the project that do not meet the requirements of this Special Provision without prior written approval from the Department, up to and including removal and replacement.

A. Iron and steel: See **SP106A** Regarding Buy America (there are no changes to existing requirements)

B. Manufactured products: Currently covered under FHWA Buy America Final Rule 11/25/1983, 48 FR 53099; Waiver for Manufactured Products. If needed, use SOP 1-8 as a guide for determining manufactured products.

C. Construction materials: Use **SOP 1-8** as a guide for determining construction materials.

The BABA's DOT Waiver of Buy America Requirements for De Minimis Costs requirements:

The total value of the noncompliant products is no more than the lesser of $1,000,000 or 5% of total applicable costs for the project.

- **Total value of non-compliant products.** In applying the waiver, the "total value of the non-compliant products" does not include the value of those products subject to a separate Buy America Waiver. **(Manufactured Products are not included and SP106A steel and iron products not included) (Costs do not include installation on the project site, profits. Only costs to the Manufacturer or to the Project Site)**

- **Total applicable project costs.** The cost of materials (including the cost of any manufactured products) used in the project that are subject to a domestic preference requirement, including materials that are within the scope of an existing waiver. **(Includes Manufactured Products, but not SP106A steel and iron products) (Costs do not include installation on the project site, profits. Only costs to the Manufacturer or to the Project Site))**

The Contractor shall provide certifications, material documents, and cost calculations to the Engineer for all of the noncompliant products anticipated to be used in the project before being incorporated.

The Contractor shall be responsible for all cost associated with products that are permanently incorporated into the project that do not meet the requirements of this Special Provisions without prior written approval from the Department, up to and including removal and replacement.

CIRCULAR LETTER

SECTION: **107.01 LAWS TO BE OBSERVED**
NUMBER: **107.01-01**
SUBJECT: **CONTRACTOR EMPLOYEE SAFETY AND HEALTH PROGRAM**
DATE: **MARCH 1, 2024**

Construction Contracts:

At the preconstruction meeting, the Contractor shall submit to the Team Lead written certification of an Employee Safety and Health Program (ESHP). The ESHP shall be developed by a safety professional with a minimum of 30 hours OSHA Construction Training. The Team Lead shall verify that the certification letter includes (at a minimum) the following:

1. Certification that the ESHP meets or exceeds all Federal, State, and local Safety and Health Standards.
2. Listing of the qualifications of the **safety professional** responsible for developing and maintaining the ESHP.
3. Name and 24/7 contact information of the **management level personnel** responsible for managing and implementing the ESHP for the contractor.
4. Name and 24/7 contact information for the **supervisory level personnel** responsible for implementing and monitoring the ESHP at the construction site.
5. Name and 24/7 contact information of the **Traffic Control Coordinator**.
6. Certification that all **sub-contractors** have a safety program.

The Certification letter must be submitted to the Team Lead before any work commences on the project.

Maintenance Contracts:

Includes on-call guardrail, sweeping, on-call striping/retracing, litter removal, tree services, mowing, and work performed at Welcome Centers and Rest Stops.

Prior to work beginning, the Maintenance Contractor must submit a Certification of an ESHP to the Team Lead. The Certification shall include (at a minimum):

1. Certification that the ESHP was developed by a safety professional with 30 hours of OSHA Construction Training.
2. Certification that the ESHP covers the unique and specific hazards for the type of work listed above and that a Hazard Communication Program is part of the ESHP.
3. Name and 24/7 contact information of the Safety professional responsible for developing and maintaining the ESHP.
4. Name and 24/7 contact information of the Traffic Control and Safety Supervisor who has the authority to stop work on the project.

For all Contracts:

If an incident occurs on a construction/maintenance project that requires hospitalizations, or TOSHA Citation to be submitted, the Contractor shall send notification of the incident to the Team Lead who will forward to the Regional Safety Office.

CIRCULAR LETTER

SECTION: **107.08 PROTECTION OF STREAMS, LAKES AND RESERVOIRS**
NUMBER: **107.08-01**
SUBJECT: **NOTICE OF TERMINATION PROCESS FOR ENVIRONMENTAL PERMITS**
DATE: **FEBRUARY 9, 2022**

Final Environmental Permit Termination Process

The Contractor shall not be released from the project until the NOTs for TDEC's Water Quality permits, TDEC Stormwater Permit and the USACE permit, as applicable, have all been terminated.

A. Construction General Permit (CGP) Notice of Termination (NOT)

For all projects with a NPDES permit (CGP) where land disturbing activities are complete, the Operations District Supervisor (ODS) (or designee) shall check the following.

1. The project meets the definition of "Final Stabilization", as specified in the CGP.
2. The contractor has removed all temporary erosion prevention and sediment control (EPSC) measures.

Once these criteria have been met, the ODS (or designee) shall contact the Regional Environmental Technical Office (ETO), the Contractor (or appointed representative), the TDOT inspector (either in-house or consultant hired), TDOT EPSC inspector, and the QA Inspector for the specific project to conduct the final Environmental QA Inspection for concurrence of final stabilization. If concurrence is reached by all parties, the QA inspector will document this concurrence within the final Environmental QA report.

If concurrence is not achieved, one of the following options shall be chosen:

1. The Contractor shall complete all repairs necessary to achieve final stabilization and repeat the review process.
2. If a situation occurs where an agreement cannot be reached regarding a project's final stabilization, the Environmental Division's Compliance and Field Services Section may contact the appropriate TDEC Environmental Field Office for a regulatory determination.

Once the final Environmental QA report is posted at the designated location (e.g., Stormwater Drive), the ODS (or designee) shall notify the Operations District Engineer (ODE) (or designee) within one week of the posting.

The CGP NOT shall be completed and submitted within 30 calendar days of the posting of the final QA Report.

The CGP NOT Form CN-1175 shall be completed and signed by the ODE (or designee). The description of the project for the NOT shall include the language as it appears on the Notice of Coverage (NOC) (including the NPDES tracking number and contract number) in the contract proposal, and the information requested.

The ODE (or designee) shall submit the completed form to the Regional ETO.

The completed CGP NOT request shall be submitted by the Regional ETO to the appropriate address found on the NOT form, with copies sent to the following parties:

1. Operations District Engineer
2. Operations District Supervisor
3. Contractor responsible party
4. QA Inspector
5. Compliance Field Section (TDOT.Env.FieldServices@tn.gov)
6. EPSC inspector
7. Regional Director of Operations
8. Operations Regional Engineer
9. NPDES email account (TDOT.Env.NPDES@tn.gov)
10. Select Appropriate Regional Environmental Technical Office:

R1.EnvTechOffice@tn.gov	Ecology and Storm Water Permit
R2.EnvTechOffice@tn.gov	Ecology and Storm Water Permit
R3.EnvTechOffice@tn.gov	Ecology and Storm Water Permit
R4.EnvTechOffice@tn.gov	Ecology and Storm Water Permit

B. TDEC Aquatic Resource Alteration Permit (ARAP) Notice of Termination (NOT)

For projects with general ARAP(s) where permitted work is complete at all locations and the project has reached final stabilization, the ODS (or designee) shall check that:

1. All permitted activities have been completed according to the terms and conditions of the permit
2. Any special permit conditions have been met
3. No unauthorized work has occurred.

Individual ARAPs do not need to be terminated.

Once these criteria have been met, the ODS (or designee) shall contact the Regional ETO, the Contractor (or appointed representative), the TDOT inspector (either in-house or consultant hired), TDOT EPSC inspector, and the QA inspector for concurrence that all permitted work is complete and in compliance at each permitted site. If concurrence is reached by all parties, the QA inspector will document this concurrence in the QA Inspection Report.

If concurrence is not achieved, one of the following options shall be chosen:

1. The Contractor shall complete all repairs necessary to achieve permit close out and repeat the review process.
2. If a situation is reached where an agreement cannot be reached regarding completion of the permitted activity, the Environmental Division's Compliance and Field Services Section may contact the appropriate TDEC for a regulatory determination.

Once the final Environmental QA report is posted at the designated location (e.g., Stormwater Drive), the ODS (or designee) shall notify the ODE (or designee) within one week of the posting.

The ARAP NOT shall be completed and submitted within 30 calendar days of the posting of the final QA Report.

The ARAP NOT Form CN-1450 shall be completed and signed by the Regional ETO. The description of the project for the NOT shall include the language as it appears on the Notice of Coverage (NOC) (including the ARAP permit number, PIN, and contract number) in the contract proposal, and the information requested on the attached form.

The completed ARAP NOT request shall be submitted by the Regional ETO to the appropriate address found on the NOT form, with copies sent to the following:

1. Operations District Engineer
2. Operations District Supervisor
3. HQ Environmental Engineering Office (TDOT.Env.Permits@tn.gov)
4. Contractor responsible party
5. QA Inspector
6. Compliance Field Section (TDOT.Env.FieldServices@tn.gov)
7. EPSC Inspector
8. Operations Regional Engineer
9. Regional Director of Operations

C. U. S. Army Corp of Engineers (USACE) Section 404 Permit

For projects with a USACE Section 404 Permit/Nationwide Permit where permitted work is complete at all locations and the project has reached final stabilization, the ODS (or designee) shall check that:

1. All permitted activities have been completed according to the terms and conditions of the permit
2. Any special permit conditions have been met
3. Where the project contains a mitigation site, the USACE compliance field visit has occurred, and concurrence has been granted
4. No unauthorized work has occurred

5. For projects that contain a Mitigation Site, these additional steps will be followed at each site:
   - **a.** If the USACE permits contain the "As Built" requirement it is the responsibility of the contractor to develop the "As Built" plans as directed by and meeting the requirements of the USACE Permits. "As Built" requirements are for permitted features as specified in the USACE Permit, not the entire project.
   - **b.** Once the ODS (or designee) is satisfied that the "As Built" requirements have been met and that the mitigation site is in compliance with the permits and approved plans, submit the "As Built" documentation to the Regional ETO for review.
   - **c.** The Regional ETO shall review the "As Built" documentation for mitigation compliance and work with ODS to ensure all requirements have been met.
   - **d.** The Regional ETO will submit the "As Built" documentation to the HQ Mitigation Office for use in scheduling a USACE Field Compliance Inspection.
   - **e.** The USACE Field Compliance Inspection is focused only on the permitted areas, the roadway project may still be under construction when this field visit occurs.
   - **f.** The USACE findings from the Field Compliance Inspection must be addressed prior to completing the process.

Once these criteria have been met, the ODS (or designee) shall contact the Regional ETO, the Contractor (or appointed representative), the TDOT inspector (either in-house or consultant hired), the TDOT EPSC inspector and the QA inspector for concurrence that all permitted work is complete and in compliance at each permitted site. The ODS (or designee) should also submit the documentation showing the USACE has concurred that on-site mitigation sites are in compliance with the permits. The QA inspector will document this concurrence in the QA Inspection Report.

Once the final QA Inspection Report is posted at the designated location (e.g., Stormwater Drive), the ODS (or designee) shall notify the ODE (or designee) within one week of the posting.

The USACE termination request shall be completed and submitted within 30 calendar days of the posting of the final QA Report.

The USACE termination request shall be made on the USACE Compliance Certification form attached to the USACE permit. The Regional ETO shall complete and sign the form, ensuring that the permit number, PIN, and contract number are included. The USACE Compliance Certification shall be submitted by the Regional ETO to the address provided on the form, with copies sent to the following parties:

1. Operations District Engineer
2. Operations District Supervisor
3. Contractor responsible party
4. QA Inspector

5. Compliance Field Section (TDOT.Env.FieldServices@tn.gov)
6. EPSC Inspector
7. Operations Regional Engineer
8. Regional Director of Operations
9. Environmental Engineering Office (TDOT.Env.Permits@tn.gov)

Documentation from the USACE acknowledging the closure of the project will not be received. It should be assumed that the project will be closed when the USACE Compliance Certification form request is sent. If notified that the USACE is not in agreement with the termination request, notify the Environmental Division Field Services Section at TDOT.Env.FieldServices@tn.gov and the appropriate CFS Regional Supervisor.

CIRCULAR LETTER

SECTION: **107.08 PROTECTION OF STREAMS, LAKES AND RESERVOIRS**
NUMBER: **107.08-02**
SUBJECT: **ENVIRONMENTAL PERMIT MODIFICATION OR NEW PERMIT PROCESS**
DATE: **FEBRUARY 9, 2022**

This Circular Letter establishes the process for Operation's requesting construction changes in or around environmental features (streams, springs, seeps, sinkholes, wetlands, etc.) or discovery of an environmental feature within the construction area not originally identified in the plans or Environmental Boundary Report (EBR). When one of the above scenarios occurs, a permit modification or a new water quality permit might be required.

A. Permit Modification

If the project has water quality permits issued by Tennessee Department of Environment and Conservation (ARAP), United States Army Corps of Engineers (404) or Tennessee Valley Authority (Section 26a), a permit modification might be required if there are any deviations from the issued permits, including but not limited to the following:

1. New impacts are proposed to environmental feature(s)
2. The impact(s) increases above the permitted amount(s) including additional riprap
3. A bottomless structure (slab bridge) needs to be changed to a box culvert
4. A new environmental feature is discovered within the construction area.

B. New Permit

If water quality permits were not originally required for the project, a permit would be required if:

1. Impacts are proposed to environmental features
2. A new environmental feature is discovered within the construction area

Water Quality Permit

Water quality permits are required when impacts are proposed within the regulatory agency's jurisdictional areas: "Waters of The State" and/or "Waters of The United States" (i.e., perennial, and intermittent streams, wetlands, springs, sinkholes, etc.). Jurisdiction varies per agency around streams so any proposed alterations near the stream (stream channel, stream banks, and/or buffer zone) needs to be coordinated with the proper Environmental ETO before changing in the field.

Agency regulations require that proposed impacts must demonstrate avoidance and minimization when considering proposed changes to environmental features. When the impacts are unavoidable and exceeds regulatory thresholds, compensatory mitigation is required to offset the proposed changes.

During construction of the project, issues with site conditions, construction techniques, construction materials, or discovery of new environmental features may warrant the need for modification(s) to the issued water quality permits or a new water quality permit. However, additional impact to environmental features should be avoided and minimized to the maximum extent possible. **Environmental permits shall not be modified for construction convenience.**

A construction project may have one or more water quality permit sites within its termini. Any change to the information listed in the permit(s), or any environmental features discovered during construction, would require regulatory agency approval prior to any alteration or impact to aquatic resource. This regulatory agency approval would be granted through the modification of an existing permit or issuance of a new permit.

Permit Modification or New Permit Process

Before beginning construction, ensure that all work proposed around in, or around environmental features is identified in the water quality permits and corresponds with existing construction plans. If any information doesn't match the plans or a permit is not provided, contact the Regional ETO before construction begins around the environmental features.

When a construction change is required in or around an environmental feature or a new feature is discovered, the following process shall be followed prior to the changes being constructed. **No changes shall be constructed, until Regional Operations receives a permit modification, permit or approval to proceed from either the Regional ETO or HQ Permit Section.**

The Project Development Division shall be consulted to determine if the alteration will significantly change the hydraulics of the structure or require additional Right of Way (ROW). Environmental Boundaries Data Sheets, photos, etc. should accompany this request.

A. The Operations District Engineer (or designee) shall be the single point of contact for Operations during the permit modification or permit request process. The Operations District Engineer (or designee) must coordinate any request with the Regional ETO at the following email addresses:

1. R1.EnvTechOffice@tn.gov
2. R2.EnvTechOffice@tn.gov
3. R3.EnvTechOffice@tn.gov
4. R4.EnvTechOffice@tn.gov

B. The Operations District Engineer (or designee) will submit the following information to the Regional ETO:

1. Subject line of email
   - **a.** Contract Number
   - **b.** PIN
   - **c.** Route and Termini
   - **d.** County

2. Body of Email:
   - **a.** Description of the requested modification
   - **b.** Reason modification is required
   - **c.** Alternatives considered when determining modification
   - **d.** Impacted environmental feature(s) name and stream number
   - **e.** For a new environmental feature(s), provide approximate station and offset information.
   - **f.** Does modification impact on-site mitigation
   - **g.** Modification construction schedule
3. Attachments
   - **a.** Drawings, sketches, or marked up plan sheets showing the proposed change or new environmental feature requiring a permit or permit modification.
   - **b.** Photos that aid in the justification of the proposed change

C. The Regional ETO will review the request to determine if the modification can be justified, if a permit modification is required, if additional information is needed or work can proceed. Once all required information needed for the permit or permit modification request is obtained, the request package will be sent to HQ Permits Section to develop the regulatory agency submittal. New permit(s) or permit modification(s) that require mitigation may take longer because mitigation credits are required prior to application. The response time from the regulatory agencies on ARAP and/or Section 404, and/or TVA Section 26a modification request can take between 45 to 120 days depending on the permit type and the need for mitigation.

D. While waiting for regulatory approval for the new permit or modified permit, work can continue in all areas except for those needing new or additional permit coverage. **The areas waiting for permit coverage should be protected and no construction or associated impacts should occur until receiving the permit(s). Measures must be implemented to prevent further degradation or damage to the environmental features while waiting for the permit issuance.** Contact the Regional ETO for any questions about allowable construction activities, permit status or protective measures.

E. The HQ Permits Section will distribute the new permits or permit modifications to the standard distribution list once all have been obtained. Prior to initiating work in the areas of new coverage, review the permit(s) to ensure compliance and compatibility with construction plans. Work shall begin or continue in these areas once permits or permit modifications have been received.

CIRCULAR LETTER

SECTION: **107.22**
NUMBER: **107.22-01**
SUBJECT: **AMERICANS WITH DISABILITIES ACT (ADA) COMPLIANCE ON RESURFACING AND OTHER MAINTENANCE TYPE PROJECTS**
DATE: **OCTOBER 2, 2015**

The Department of Transportation's goal is to provide an accessible transportation network to all users; this includes ensuring the safety of pedestrians and individuals with disabilities. Any project that includes the construction or alteration of a facility that provides access to pedestrians must be made accessible to persons with disabilities.

Projects with existing pedestrian facilities must provide an adequate traffic detour for pedestrian movement in compliance with the Americans with Disability Act.

Resurfacing is an alteration that triggers the requirement to add curb ramps if it involves work on a street or roadway spanning from one intersection to another, and includes overlays of additional material to the road surface, with or without milling.

It is not practical for the project designer on small projects, such as resurfacing, to survey and design each and every curb cut adjustment. In most cases, the construction project engineer will be able to utilize standard drawings and accommodate the accessibility requirements easily.

If a resurfacing project is extended where it will impact an intersection with pedestrian crossings, the crossings must comply with ADA requirements where technically feasible. Standard drawings should be utilized by field construction staff to adjust the intersection as required.

In some cases, our standard drawings may call for a larger sidewalk than currently exists, or it may be technically infeasible to meet the grade requirements stipulated. When adherence to the standard drawing is technically infeasible, field engineering solutions are appropriate. In these cases, the construction project engineer shall document via **both** before and after photos and a written explanation (and sketches if appropriate) of why it was technically infeasible to meet the requirement of the standard drawing and what was done to maximize access. The solution should be well thought out prior to its implementation.

If further assistance is required, the TDOT ADA Coordinator should be contacted for assistance.

CIRCULAR LETTER

SECTION: **108.01 SUBLETTING OF CONTRACT**
NUMBER: **108.01-01**
SUBJECT: **SUBLETTING OF CONTRACTS**
DATE: **MAY 17, 2024**

SECOND TIER CONTRACTS

When work to be performed under an approved subcontract is sublet by the subcontractor to a second (or more) tier subcontractor, a list of the work included in the second (or more) tier subcontract shall be submitted on the Department's Second Tier Subcontract Form to the Headquarters Construction Division for approval prior to performance of any work covered by the second-tier subcontract.

APPROVAL AND DISTRIBUTION OF SUBCONTRACTS

Effective immediately, approval and distribution of subcontracts will be handled as follows:

1. The Prime Contractor will be responsible for submitting subcontracts to the Headquarters Construction Division for review and approval.
2. Subcontractors will be responsible for submitting Tier Subcontracts to the Headquarters Construction Division for review and approval.
3. The Headquarters Construction Division will forward DBE Tier Subcontracts to the Civil Rights Division – Small Business Development Program for review.
4. The Headquarters Construction Division will email copies of approved subcontracts to the appropriate District Offices and the Civil Rights Division – Small Business Development Program.
5. District Office or designated representative will distribute one copy of the approved subcontract to the following:
    1. Team Lead
    2. Prime Contractor
    3. Subcontractor
    4. Audit Support Unit
        TDOR Audit Division
        6th Floor, Andrew Jackson Bldg.
        Nashville, TN 37242
        615-741-8499
        Auditsupport.requests@tn.gov
    5. Employment Security Division
        Employer Acct. – Large Audit
        220 French Landing Dr.3-B
        Nashville, TN 37243
        615-741-0930
        Mark.howell@tn.gov

SUBCONTRACTORS AND DISADVANTAGED BUSINESS ENTERPRISES (DBE)

As stated in sections 108.01 and 102.01 of the specifications, all work to be sublet must be approved, and must be performed by a subcontractor that is prequalified with the Department.

All required contractual work that is performed by a contractor other than the prime contractor will be considered a subcontractor (or tier subcontractor), and therefore must be prequalified, must submit sub-contract forms for approval, receive approval, and must submit certified payrolls (section 107.20). No subcontractor work shall begin work until the subcontract has been approved by TDOT and the contract is put into effect. Any work completed before approval and without other prior authority of TDOT will be considered unauthorized and may not be paid for as stated in 105.12 of the specifications.

The actual, legal subcontract between contractors shall physically include the following and it cannot be referenced:

- FHWA 1273
- DBE Assurance Statement

Any work involving "laborers and mechanics", as defined by the Federal and/or State classification of workers and prevailing wage rates, will be required to be a subcontractor to verify compliance with Davis-Bacon Act and State prevailing wage laws. Therefore, a subcontract will be required for flagging, drilling/blasting, sweeping, surveying, trucking/hauling (see below) and all other standard work items.

When labor is subcontracted or the contractor enters into an employee lease agreement, the procedures in Circular Letter 1273-05 or 1273-05.01 must be adhered to.

Hauling/Trucking firms must have a subcontract when they are working and hauling material "on the project site" as defined in Circular Letters 1273-04 and 1273-04.01. When hauling/trucking firms are not working "on the project site" and are hauling from a non-project specific or a commercial site, a sub-contract is not required. However, if a hauling/trucking firm is a DBE, then a subcontract and certified payrolls will be required for documentation purposes. (The prevailing wages under Davis-Bacon or TN Prevailing Wage Act are *not* required if the hauling/trucking firm is not working "on the project site" but the certified payroll will serve as proof the DBE hauling subcontractor was working on the project and the drivers are employees of the DBE)

Any DBE who is performing work, or providing materials, must enter into a subcontract so TDOT can accurately monitor both race conscious and race neutral DBE participation. However, if the DBE is a manufacturer or regular dealer/material supplier *ONLY* (as defined in SP 1247) they are not required to be pre-qualified. They must state on the Sub-contract form that they are a MANUFACTURER ONLY or MATERIAL SUPPLIER ONLY.

Reference:
From the Standard Specifications:

> **Subcontractor.** Any individual, firm, partnership, or corporation to whom the Contractor sublets any part of the ***Work*** under the Contract.
>
> **Work.** The Work shall mean the furnishing of all labor, materials, equipment, and any incidentals necessary to the satisfactory completion of the project, including the carrying out of all duties and obligations imposed by the Contract.

From the TDOT Rules Chapter1680-5-3 Prequalification of Contractors:

> "Subcontractor" means any individual person, partnership, limited liability company, corporation, or other business entity, acting directly or through a duly authorized representative, that has entered or may seek to enter into a contract with a contractor to perform some part of the work under a contract with the Department; provided, however, that this definition of subcontractor does not include any such person or business entity that only provides or delivers materials to a contractor or subcontractor performing work under a contract with the Department.

From FHWA 1273:
GENERAL

1. These contract provisions shall apply to all work performed on the contract by the contractor's own organization and with the assistance of workers under the contractor's immediate superintendence and to all work performed on the contract by piecework, station work, or by subcontract.
2. Except as otherwise provided for in each section, the contractor shall insert in each subcontract all of the stipulations contained in these Required Contract Provisions, and further require their inclusion in any lower tier subcontract or purchase order that may in turn be made. **The Required Contract Provisions shall not be incorporated by reference in any case**. The prime contractor shall be responsible for compliance by any subcontractor or lower tier subcontractor with these Required Contract Provisions.

From 49 CFR Part 26.13:

Each contract you sign with a contractor **(and each subcontract the prime contractor signs with a subcontractor)** must include the following assurance:

"The contractor, sub recipient or subcontractor shall not discriminate on the basis of race, color, national origin, or sex in the performance of this contract. The contractor shall carry out applicable requirements of 49 CFR part 26 in the award and administration of DOT-assisted contracts. Failure by the contractor to carry out these requirements is a material breach of this contract, which may result in the termination of this contract or such other remedy as the recipient deems appropriate."

CIRCULAR LETTER

SECTION: **108.02**
NUMBER: **108.02-01**
SUBJECT: **CONSULTANT INSPECTION NOTICE (WORK ORDERS)**
DATE: **OCTOBER 2, 2015**

Work Orders sent to the Contractors for Contracts that utilize Consultant Engineering and Inspection (CEI) shall include the following language:

> This project has been assigned to "Name of District Operations Supervisor", whose address is "Location", and he is being requested by copy of this letter to notify the proper officials of this Department as to the date on which work is actually begun and the date from which time will be charged on the Contract. "Name of Consultant" will be performing the Inspection services on this Contract in accordance with Subsection 105.10 and 105.11 of the Standard Specifications. "Name of Consultant" will be the duly authorized representative of the Department and will work under the direction of "Name of District Operations Supervisor". Conflicts or interpretation involving the inspection of the work or the Standard Specifications shall be resolved through "Name of District Operations Supervisor" or the Regional Operations Office.

CIRCULAR LETTER

SECTION: 108.03 PROSECUTION OF CONSTRUCTION
NUMBER: 108.03.B
SUBJECT: BAR CHART SCHEDULES
DATE: MARCH 1, 2024

All projects let on or after February 5, 2021 must follow the scheduling process outlined within this Circular Letter and the 2021 Standard Specifications.

Receiving and Storing Schedule Files

Once a schedule and related materials are received from the contractor, these files shall be stored under the respective contract folder on the CMS/File Management Drive (a.k.a. Unit Drive).

Within the contract's folder, create a folder titled "Bar Chart Schedules".

Save all schedule files and narratives in this folder.

Baseline Bar Chart Schedule

At the preconstruction meeting, the Contractor shall submit a draft baseline Bar Chart Schedule. This is to discuss the Contractor's plan to execute the work by the completion date set forth in the Proposal. This also allows discussion of potential conflicts that may affect the schedule and how they might be mitigated. The baseline Bar Chart Schedule shall include, in its entirety, the detailed activities representing the entire duration of the project.

The deliverables expected from the Contractor include the electronic copy and hard copy of:

Bar Chart Schedule

Narrative

When reviewing the baseline Bar Chart schedule, use the **Baseline Bar Chart Schedule Checklist form** to ensure a complete Baseline Bar Chart project schedule has been submitted to the Engineer in accordance with Section 108.03.B of the Specifications.

Narrative

The schedule narrative adds and supports understanding of the basis and assumptions in the schedule. The Narrative shall be prepared in accordance with Section 108.03.B of the Specifications and shall include the following:

Estimated quantities for controlling activities. The assumed estimated Work quantities that are anticipated to be needed.

Estimated production rates for controlling activities. The assumed estimated production rates that are anticipated to be used.

Workdays per week. The assumed number of workdays per week for all activities. The number of workdays per week may vary depending on the activity work types. The Contractor should clarify all assumptions. (Note: Some Contractors will assume 5 workdays per week, and then use additional days during the week if progress falls behind schedule.)

Holidays. All Holidays in which work is not planned or allowed.

Number of shifts per day. The assumed number of shifts per day, including any exceptions.

Number of hours per shift. The assumed number of hours per shift, including any exceptions.

Planned number and types of crews. The assumed number of crews and types, including any exceptions.

Equipment. Lists of Contractor's and Subcontractor's expected equipment. Standard machinery and equipment do not need to be listed individually. The Contractor should comment on any unique or special equipment that they plan to use.

A number of anticipated adverse weather days for each month. A monthly breakdown of the number of Nonwork days anticipated due to adverse weather conditions, by work type if applicable.

Bar Chart Schedule

Activities. The essential features of the Work.

Activities that may delay completion. The activities that might delay the completion or controlling Work on the project.

Planned start and completion dates for each activity. Start and Finish Dates should be listed for each activity.

Duration of each activity in workdays. The duration of each activity in workdays; and the calendar (number of workdays per week, holidays, number of shifts per day, and number of hours per shift) as described in the narrative. Schedules are required to be updated monthly. In order to determine whether progress is on schedule with each update, activities durations should be 20 workdays or less. Longer activities shall be broken up into two or more. Durations lasting more than 20 workdays, may be approved by the Team Lead.

Sequencing of activities. The sequencing of all activities including predecessors and successors.

Scheduling Software. If using scheduling software to create the bar chart schedule, have the contractor submit related reports for the predecessor and successor report, the sort by total float, and the sort by early start.

Dates related to Procurement. Procurement activities are unique in that they are not constrained by weekends, holidays, weather, or other non-workday restrictions. These activities will therefore utilize a standard 7-day work calendar. Similar activities include materials, equipment and articles of special manufacture.

Furthermore, procurement activities lasting more than 30 days cannot be subdivided into shorter activities. Such activities still impact the project's schedule, so it is necessary to include related activities in the schedule.

Activities related to Submittals. Administrative activities associated with the work shall be defined and included in the schedule. These include activities related to the submission of working drawings, plans, and other data specified for review or approval by the Department.

Dates related to Department inspections. The Department's activities associated with the work shall also be defined and included in the schedule.

Dates related to Specified activities. Any work performed by parties other than the contractor that can be defined as discrete work task and other time-based tasks necessary to complete the project shall be included.

Schedule Timeline. The timeline broken down into weekly time periods with a vertical line identifying the first working day of each week.

Schedule Updates

The Bar Chart schedule will be updated on a monthly basis to determine the current status of the project. As the schedule is updated, it is important to ensure that the schedule accurately reflects how the work is being performed.

If the contractor fails to provide monthly schedule updates and/or address the Engineer's comments regarding the monthly schedule update, within 10 calendar days following the progress estimate payment period cutoff date, the Engineer may withhold up to 10% of the monthly progress estimate payment, until such time as an acceptable update has been provided. Should this occur, contact TDOT Finance to add item 108-03.02, Bar Chart Schedule Updates, Funds Withheld, by the dollar; for the deduction on the monthly estimate. Any funds withheld from payment will be completely paid to the Contractor when the schedule is updated, or the pre-final estimate is being processed.

Use the **Bar Chart Schedule Update Checklist form** to analyze the current progress, ensure compliance with Section 108.03 of the Specifications, and determine potential needs for a schedule revision.

General

Actual Progress. It is important for schedule updates to provide the as-built status of the project.

Approved Change Orders. It is important to show schedule updates documenting approved change orders.

Updated critical or longest path. The critical path (shortest duration in which the project may be completed) may change if non-critical activities are delayed.

Completion Date. Ensure the schedule ends on or before the contract completion date.

Submission Requirements

The deliverables expected from the Contractor include the electronic copy and hard copy of:

Updated Bar Chart Schedule

Cover Letter

Updated Bar Chart Schedule

Actual start and finish for each activity. Start and Finish Dates should be listed for each activity.

Percentage Complete.

Original Duration. The original duration of activities started and ongoing.

Remaining Duration. The remaining duration of activities started and ongoing.

Schedule Changes. There should be a summary of schedule changes necessitated by changes to the Project as directed and any resulting from changes in the Contractor's planning or progress of the Work.

Cover Letter

Each monthly schedule update shall include a cover letter with the following information:

Schedule Revisions. The letter logically identifies and explains any schedule revisions since the prior monthly update.

Progress of Work. Includes a general description of the progress of the Work since the prior monthly update.

Special Interest. Identifies any items of special interest.

Progress Assessment

Upon receiving each schedule update, progress will need to be assessed to determine if actual construction has fallen behind the plan of operations or schedule by more than 15% or 60 calendar days. When this occurs, the Contractor shall offer for approval a revised schedule that reflects timely completion. Otherwise, the Team Lead may request a revised schedule.

A quick calculation of time versus money can be calculated using TIME COMPLETE (%) and WORK COMPLETE (%) from the most recent ESTIMATE in Site Manager. TIME COMPLETE (%) minus WORK COMPLETE (%) will result in the delay based on the straight-line method.

Circumstances that May Lead to Requesting a Revised Schedule

The Team Lead may request a revised schedule under the following circumstances:

> **15% or more behind schedule** - A delay (actual or projected) to a scheduled milestone or project completion date of 15% or more warrants requesting a revised schedule.
>
> **Difference in actual sequence or duration of work** - A difference between the actual sequence or duration of work and that depicted in the schedule warrants requesting a revised schedule. The revision is necessary to correct unrealistic activity durations or a significant number of activities that are being performed out-of-sequence.
>
> **Alteration by Change Order** - The issuance of a Change Order that alters the planned sequence of work or the method and manner of its performance by adding, deleting, or revising activities warrants requesting a revised schedule.

Schedule Revisions

A revision of the Bar Chart schedule is required when the schedule has been significantly impacted by a change in the Work or condition or the Contractor has deviated significantly from his baseline plan or schedule.

The Contractor may offer a revised schedule, or the Team Lead may request one. Circumstances that may lead to requesting a revised schedule are addressed in the **Bar Chart Schedule Update Checklist form** and in Section 108.03.D of the Specifications.

If the Contractor cannot justify unsatisfactory progress, administrative actions can be made in accordance with Section 108.03.D of the Specifications.

Communication with the Contractor

Upon review of the Bar Chart schedule and related materials, the Team Lead will either: Provide

review comments,

Request additional information,

Accept the Bar Chart schedule, or

Reject the Bar Chart schedule

Providing review comments

General review comments may be provided verbally, noted in meeting minutes, or in writing. No formal letter is required.

Template Letters

Template Letters are available on Construction Job Box.

LINKS TO FORMS:

Bar Chart Acceptance Letter
Bar Chart Request Additional Information Letter
Bar Chart Schedule Rejection Letter

Baseline Bar Chart Schedule Checklist
Bar Chart Schedule Update Checklist

CIRCULAR LETTER

SECTION: 108.03 PROSECUTION OF CONSTRUCTION
NUMBER: 108.03.C
SUBJECT: CRITICAL PATH METHOD (CPM)
SCHEDULES DATE: FEBRUARY 5, 2021

All projects with durations longer than 24 months or when required by contract must follow the scheduling process outlined within this Circular Letter and the meet requirements in 108.03.C. The **Initial Project Schedule (IPS)**, the **Baseline CPM Project Schedule**, and **Subsequent Updates** shall be generated using Primavera Project Management (P6) scheduling software.

Receiving and Storing Schedule Files

Once a schedule and related materials are received from the contractor, these files shall be stored under the respective contract folder on the CMS/File Management Drive (a.k.a. Unit Drive).

Within the contract's folder, create a folder titled "CPM Schedules".

CPM Submission Requirements

One hard copy in PDF or printed and one electronic copy in .xer format.

A Gantt Chart in PDF format to fit 11x17 inch paper. Gantt Charts to be included are;

Project Critical Path sorted by early start;

All uncompleted work activities as of data date sorted by area and early start;

60 day look ahead sorted by early start.

Narrative report in PDF file format to fit 8.5x11 inch paper.

Detailed approach to sequencing the work, including assumptions and restrictions considered in development and updates of the schedule;

Description of the Critical Path;

Description of the near-critical paths, defined as those activities not on the Critical Path with total float less than 20 days of total float;

Identification of potential conflicts that may affect the schedule and how they might be mitigated;

Identification of submittal approvals necessary for the work to proceed as shown;

Description of the calendars including identification of workdays per week, holidays, number of shifts per day, and number of hours per shift;

Description of how the schedule accommodates adverse weather days for each month;

Description of execution plan, including number and type of crews, a list of subcontractors' crews, and expected equipment, but not limited to large equipment transport and delivery, transportation permits for oversized/overweight loads, and availability.

Initial Project Schedule

Within thirty (30) calendar days after the Contract Award, the contractor shall submit an Initial Project Schedule (IPS). The IPS shall be submitted in accordance with the CPM schedule submission requirements and will be reviewed at the Pre-construction conference. A detailed plan shall be completed (as described in baseline CPM Schedule) for all work contemplated for the first one hundred and twenty (120) calendar days after the Work Order is issued, and include all other work thereafter in sufficient detail to identify the critical path and milestones.

Use the **Initial Project Schedule Checklist form** to ensure that a complete IPS has been submitted to the District Supervisor for review and acceptance.

Conducting the Baseline CPM Schedule Review Meeting

Within ninety (90) calendar days after the Effective Date, the Contractor shall arrange a meeting to review and submit a draft baseline CPM schedule. The purpose of the meeting is to discuss the Contractor's plan to execute the work by the completion date set forth in the Proposal. This meeting also allows discussion of potential conflicts that may affect the schedule and how they might be mitigated. The Baseline CPM shall include, in its entirety, the detailed activities representing the entire duration of the project.

During the initial project schedule meeting, use the **Initial Project Schedule Checklist form** to ensure a complete initial project CPM schedule has been submitted to the Engineer in accordance with Section 108.03 of the Specifications.

During the baseline CPM schedule meeting, use the **Baseline CPM Schedule Checklist form** to ensure a complete Baseline CPM project schedule has been submitted to the Engineer in accordance with Section 108.03 of the Specifications.

General

The schedule should begin on the same date as the Award Date (accepted date).

Baseline CPM Schedule

Working days. This refers to the use of Standard, Nonwork, and Exception calendar days in conjunction with duration dependent activities to calculate the schedule. (Note: Milestones will only contain one date.)

Planned start and completion dates for each activity. Start and Finish Dates should be listed for every activity on the Tabular Report submitted.

Alphanumeric coding structure and activity identification system.

Duration of each activity. Schedules are required to be updated monthly. In order to determine whether progress is on schedule with each update, activities durations should be 20 working days or less. Long lead activities lasting more than 20 working days, may be approved by the District Supervisor.

Finish-to-start relationships among activities, without leads or lags. Relationships, which form the logic of the project network, are used together with activity durations to determine schedule dates unless approved by the District Supervisor.

Constraints. Network logic alone cannot reflect all project situations. Sometimes activities must be accomplished according to specific dates rather than on dates determined by other activities in the project. In such cases, constraints (start, finish, mandatory, & late) may be applied. When in use, these should be noted in the narrative.

Critical Path. The sequence of activities that must be all be started and finished exactly on time in order to not delay the project. The critical activities can be identified in Primavera P6 using the Filter function.

Project Identification number. Shall remain the same for the entire duration of the project.

Activities related to Procurement. Procurement activities are unique in that they are not constrained by weekends, holidays, weather, or other non-workday restrictions. These activities will therefore utilize a standard 7-day work calendar. Similar activities include, but are not limited to fabrication of long lead materials, curing, load test, and settlement or surcharge periods.

Furthermore, procurement activities lasting more than 30 calendar days cannot be subdivided into shorter activities. Such activities still impact the project's schedule, so it is necessary to include related activities in the schedule.

Activities related to Submittals. Administrative activities associated with the work shall be defined and included in the schedule. These include activities related to the submission of working drawings, plans, and other data specified for review or approval by the District Supervisor.

Activities related to Department inspections and approvals. The Department's activities associated with the work shall also be defined and included in the schedule, such as inspections or approvals.

Specified activities performed by others. Any work performed by parties other than the contractor that can be defined as discrete work task and other time-based tasks necessary to complete the project shall be included.

Float is defined as the amount of time between the date when an activity can start (early start) and the date when an activity must start (late start). Float is a shared commodity between the Contractor and the Department, and either party has full use of the float until it is depleted.

CPM Schedule Shall NOT Include the following:

Float suppression techniques, such as preferential sequencing. Float suppression techniques include arranging critical path through activities more susceptible to a Department-caused delay. (Note: this is more applicable to A+B contracts)

Special lead/lag logic restraints. The use of leads or lags must be pre-approved by the District Supervisor before using in the schedule.

Zero total or free float constraints. Zero total or free float constraints (also known as "as late as possible") are used to make the activity finish immediately prior to its successors. This constraint consumes float by setting the Early Dates to equal the Late Dates, and as a result is prohibited.

Constraint dates other than required by the Contract. Network logic alone cannot reflect all project situations. Sometimes activities must be accomplished according to specific dates rather than on dates determined by other activities in the project.

For example, a singular ROW tract will not be available at the beginning of the project, but a specified date which is included in the contract.

The CPM schedule shall not include any constraints other than required by the "Contract Documents".

Schedule Updates

The CPM schedule will be updated on a monthly basis to determine the current status of the project. As the schedule is updated, it is important to ensure that the schedule accurately reflects how the work is being performed.

> **IMPORTANT: TO VERIFY THAT THE SCHEDULE UPDATES ARE CORRECT, IT IS NECESSARY FOR FIELD STAFF TO COLLECT AS-BUILT INFORMATION THROUGH A VARIETY OF SOURCES. SOURCES INCLUDE, BUT ARE NOT LIMITED TO, DAILY WORK REPORTS (DWRS), MEETING MINUTES, AND PROGRESS PHOTOGRAPHS/VIDEOS. (NOTE: IT IS RECOMMENDED TO DOCUMENT THE ACTUAL FINISH DATES FOR COMPLETED ACTIVITIES IN THE DAILY WORK REPORTS (DWRS)).**

If the contractor fails to provide monthly schedule updates and/or address the Engineer's comments regarding the monthly schedule update, by the estimate payment date, the Engineer may withhold up to 10% of the monthly estimate payment, until such time as an acceptable update has been provided. Should this occur, contact TDOT Finance to add item 108-03.01, CPM Schedule Updates, Funds Withheld, by the dollar; for the deduction on the monthly estimate. Any funds withheld from payment will be completely paid to the Contractor when the schedule is updated, or the pre-final estimate is being processed.

Use the **CPM Schedule Update Checklist form** to analyze the current progress, ensure compliance with Section 108.03 of the Specifications, and determine potential needs for a schedule revision.

General

> **Activity Status**. It is important for schedule updates to provide the as-built status of the project. The Contractor is required to provide actual start and finish dates of each activity or remaining durations of activities started but not yet completed.
>
> **Out of Sequence Progress.** Any activities that have posted progress without predecessors being completed are not allowed with written approval of the District Supervisor.
>
> **Updated Critical Path**. The critical path (shortest duration in which the project may be completed) may change if non-critical activities are delayed more than the available float. A change in the critical path may extend the completion date of an interim milestone or the project. If a scheduled milestone or project completion date is delayed 15% or more behind schedule, the District Supervisor may request a revised schedule that reflects timely completion.

Submission Requirements

> **See CPM Submission Requirements**

Narrative Report

Each schedule update shall include a Narrative report, as outlined in CPM Submission Requirements, and including the following:

Sources of delay with a detailed history of the delay, corrective action, and schedule adjustments to correct the delay;

Work planned for the succeeding update period;

Pending change orders; and

Changes made to the CPM schedule. Changes include additions, deletions, or revisions to activities due to the issuance of a change order, changes to an activity duration, changes to relationships between activities, or changes to the planned sequence of Work or the method and manner of its performance including any schedule changes due to changes in the planning or progress of the Work.

Note: It is recommended to have the Contractor comment on the narrative report regarding progress of any on-going activities greater than 20 days in duration.

Progress Assessment

Upon receiving each schedule update, progress will need to be assessed to determine if actual construction has fallen behind the plan of operations or schedule by more than 15% or 60 calendar days. When this occurs, the Contractor shall offer for approval a revised schedule that reflects timely completion. Otherwise, the District Supervisor may request a revised schedule.

A quick calculation of time versus money can be calculated using TIME COMPLETE (%) and WORK COMPLETE (%) from the most recent ESTIMATE in Site Manager. TIME COMPLETE (%) minus WORK COMPLETE (%) will result in the delay based on the straight-line method.

Circumstances that May Lead to Requesting a Revised Schedule

The District Supervisor may request a revised schedule under the following circumstances:

15% or more behind schedule - A delay (actual or projected) to a scheduled milestone or project completion date of 15% or more warrants requesting a revised schedule.

Difference in actual sequence or duration of work - A difference between the actual sequence or duration of work and that depicted in the schedule warrants requesting a revised schedule. The revision is necessary to correct unrealistic activity durations or a significant number of activities that are being performed out-of-sequence.

Alteration by Change Order - The issuance of a Change Order that alters the planned sequence of work or the method and manner of its performance by adding, deleting, or revising activities warrants requesting a revised schedule.

Schedule Revisions

A revision of the baseline CPM schedule is required when the schedule has been significantly impacted by a change in the Work or condition or the Contractor has deviated significantly from his baseline plan or schedule.

The Contractor may offer a revised schedule, or the District Supervisor may request one. Circumstances that may lead to requesting a revised schedule are addressed in the **CPM Schedule Update Checklist form** and in Section 108.03(D) of the Specifications.

If the Contractor cannot justify unsatisfactory progress, administrative actions can be made in accordance with Section 108.03(D) of the Specifications.

Communication with the Contractor

Upon review of the CPM schedule and related materials, the District Supervisor will either:

Provide review comments,

Request additional information,

Accept the CPM schedule, or

Reject the CPM schedule

Providing review comments

General review comments may be provided verbally, noted in meeting minutes, or in writing. No formal letter is required.

Template Letters

Template Letters are available on the Construction Division's Website and Construction Job Box.

Time Impacts and Delays

If the Contractor has been delayed because of conditions beyond their control and they are without fault, then a time extension may be justified.

The Contractor shall notify the District Supervisor in accordance with Section 104.03 of the Specifications and submit a written request for a time extension. The written request shall include a Time Impact Analysis and supporting documentation showing the impact of the delay on the critical path.

In accordance with Section 108.07 of the Specifications, the District Supervisor may extend the contract time or completion date only if an excusable delay affects the critical path of the work as shown on the accepted progress schedule.

Time Impact Analysis (TIA)

Time Impact Analysis (TIA) is a 'forward-looking,' prospective schedule analysis technique that adds a modeled delay to an accepted CPM schedule to determine the possible impact of that delay to project completion.

The TIA provides a reasonable assessment of a delay when applied appropriately. The TIA must be calculated quickly, while the project is on-going, and is best when modeling the effects of a single change or delay event.

The TIA relies on the CPM calculations to show the differences between two schedules:

A schedule that does not include a delay, and

A schedule that does include an activity modeling the delay event.

The difference in project completion dates is considered to be the impact of the delay for time duration considerations.

There are two assumptions that make TIA possible. The first assumption is that the most recent schedule update, just before the delay, accurately displays the status of work activities on the project at the time of delay. Therefore, timely acceptance of schedule updates is critical to the TIA success. The second assumption is that actual delay will not change the remaining work plan. Essentially, the work both prior to and following the delay remain unchanged, or 'frozen'.

When TIA is appropriate and all assumptions are met, it is a simple and effective method for modeling the effects of a delay.

Steps of TIA

According to Section 108.07 of the Specifications, the Contractor is responsible for performing the TIA. These are the steps they are expected to perform:

Create activity/s to represent delay.

Insert into most recent update, but w/ zero duration.

Run network calculations. Dates should remain unchanged.

Input Approved durations into delay activity/s.

Recalculate CPM.

Determine total time impact, and then remove any delays already awarded.

TIA Deliverables

The support is very important when processing a time extension using TIA. At a minimum, the deliverables of a TIA should include:

A written request for a time extension.

Two schedules with supporting documents (narrative, tables, reports):

The most recent schedule update, just prior to the delay.

A schedule that includes an activity modeling the delay event.

Support: Primavera Power-Users

Within the Construction Division, there are Power- Users who have access to Primavera software, and advanced knowledge in CPM schedules. These Power-Users are available as a resource to provide assistance (such as running reports, or checking the TIA) as needed. To identify each Power-User and their contact information, please contact your Regional Business Development Unit.

Online Webinar recordings of Primavera P6 training are available. Go to the TDOT Learning Network and search "Primavera P6 Scheduling".

LINKS TO FORMS:

Initial Project Schedule Checklist
Baseline CPM Schedule Checklist
CPM Schedule Updates Checklist

CPM Schedule Acceptance Letter
CPM Schedule Rejection Letter
CPM Schedule Request Additional Information Letter

CIRCULAR LETTER

SECTION: 108.03 PROSECUTION OF CONSTRUCTION
NUMBER: 108.03.C
SUBJECT: CRITICAL PATH METHOD (CPM)
SCHEDULES DATE: OCTOBER 8, 2021

All projects with durations longer than 24 months or when required by contract must follow the scheduling process outlined within this Circular Letter and the meet requirements in 108.03.C. The **Initial Project Schedule (IPS)**, the **Baseline CPM Project Schedule**, and **Subsequent Updates** shall be generated using Primavera Project Management (P6) scheduling software.

Receiving and Storing Schedule Files

Once a schedule and related materials are received from the contractor, these files shall be stored under the respective contract folder on the CMS/File Management Drive (a.k.a. Unit Drive).

Within the contract's folder, create a folder titled "CPM Schedules".

CPM Submission Requirements

One hard copy in PDF or printed and one electronic copy in .xer format.

A Gantt Chart in PDF format to fit 11x17 inch paper. Gantt Charts to be included are;

Project Critical Path sorted by early start;

All uncompleted work activities as of data date sorted by area and early start;

60 day look ahead sorted by early start.

Narrative report in PDF file format to fit 8.5x11 inch paper.

Detailed approach to sequencing the work, including assumptions and restrictions considered in development and updates of the schedule;

Description of the Critical Path;

Description of the near-critical paths, defined as those activities not on the Critical Path with total float less than 20 days of total float;

Identification of potential conflicts that may affect the schedule and how they might be mitigated;

Identification of submittal approvals necessary for the work to proceed as shown;

The quantity and estimated daily production rate for controlling activities:

Description of the calendars including identification of workdays per week, holidays, number of shifts per day, and number of hours per shift;

Description of how the schedule accommodates adverse weather days for each month;

Description of execution plan, including number and type of crews, a list of subcontractors' crews, and expected equipment, but not limited to large equipment transport and delivery, transportation permits for oversized/overweight loads, and availability.

Initial Project Schedule

Within thirty (30) calendar days after the Contract Award, the contractor shall submit an Initial Project Schedule (IPS). The IPS shall be submitted in accordance with the CPM schedule submission requirements and will be reviewed at the Pre-construction conference. A detailed plan shall be completed (as described in baseline CPM Schedule) for all work contemplated for the first one hundred and twenty (120) calendar days after the Work Order is issued, and include all other work thereafter in sufficient detail to identify the critical path and milestones.

Use the **Initial Project Schedule Checklist form** to ensure that a complete IPS has been submitted to the District Supervisor for review and acceptance.

Conducting the Baseline CPM Schedule Review Meeting

Within ninety (90) calendar days after the Effective Date, the Contractor shall arrange a meeting to review and submit a draft baseline CPM schedule. The purpose of the meeting is to discuss the Contractor's plan to execute the work by the completion date set forth in the Proposal. This meeting also allows discussion of potential conflicts that may affect the schedule and how they might be mitigated. The Baseline CPM shall include, in its entirety, the detailed activities representing the entire duration of the project.

During the initial project schedule meeting, use the **Initial Project Schedule Checklist form** to ensure a complete initial project CPM schedule has been submitted to the Engineer in accordance with Section 108.03 of the Specifications.

During the baseline CPM schedule meeting, use the **Baseline CPM Schedule Checklist form** to ensure a complete Baseline CPM project schedule has been submitted to the Engineer in accordance with Section 108.03 of the Specifications.

General

The schedule should begin on the same date as the Award Date (accepted date).

Baseline CPM Schedule

Working days. This refers to the use of Standard, Nonwork, and Exception calendar days in conjunction with duration dependent activities to calculate the schedule. (Note: Milestones will only contain one date.)

Planned start and completion dates for each activity. Start and Finish Dates should be listed for every activity on the Tabular Report submitted.

Alphanumeric coding structure and activity identification system.

Duration of each activity. Schedules are required to be updated monthly. In order to determine whether progress is on schedule with each update, activities durations should be 20 working days or less. Long lead activities lasting more than 20 working days, may be approved by the District Supervisor.

Finish-to-start relationships among activities, without leads or lags. Relationships, which form the logic of the project network, are used together with activity durations to determine schedule dates unless approved by the District Supervisor.

Constraints. Network logic alone cannot reflect all project situations. Sometimes activities must be accomplished according to specific dates rather than on dates determined by other activities in the project. In such cases, constraints (start, finish, mandatory, & late) may be applied. When in use, these should be noted in the narrative.

Critical Path. The sequence of activities that must be all be started and finished exactly on time in order to not delay the project. The critical activities can be identified in Primavera P6 using the Filter function.

Project Identification number. Shall remain the same for the entire duration of the project.

Activities related to Procurement. Procurement activities are unique in that they are not constrained by weekends, holidays, weather, or other non-workday restrictions. These activities will therefore utilize a standard 7-day work calendar. Similar activities include, but are not limited to fabrication of long lead materials, curing, load test, and settlement or surcharge periods.

Furthermore, procurement activities lasting more than 30 calendar days cannot be subdivided into shorter activities. Such activities still impact the project's schedule, so it is necessary to include related activities in the schedule.

Activities related to Submittals. Administrative activities associated with the work shall be defined and included in the schedule. These include activities related to the submission of working drawings, plans, and other data specified for review or approval by the District Supervisor.

Activities related to Department inspections and approvals. The Department's activities associated with the work shall also be defined and included in the schedule, such as inspections or approvals.

Specified activities performed by others. Any work performed by parties other than the contractor that can be defined as discrete work task and other time-based tasks necessary to complete the project shall be included.

Float is defined as the amount of time between the date when an activity can start (early start) and the date when an activity must start (late start). Float is a shared commodity between the Contractor and the Department, and either party has full use of the float until it is depleted.

CPM Schedule Shall NOT Include the following:

Float suppression techniques, such as preferential sequencing. Float suppression techniques include arranging critical path through activities more susceptible to a Department-caused delay. (Note: this is more applicable to A+B contracts)

Special lead/lag logic restraints. The use of leads or lags must be pre-approved by the District Supervisor before using in the schedule.

Zero total or free float constraints. Zero total or free float constraints (also known as "as late as possible") are used to make the activity finish immediately prior to its successors. This constraint consumes float by setting the Early Dates to equal the Late Dates, and as a result is prohibited.

Constraint dates other than required by the Contract. Network logic alone cannot reflect all project situations. Sometimes activities must be accomplished according to specific dates rather than on dates determined by other activities in the project.

For example, a singular ROW tract will not be available at the beginning of the project, but a specified date which is included in the contract.

The CPM schedule shall not include any constraints other than required by the "Contract Documents".

Schedule Updates

The CPM schedule will be updated on a monthly basis to determine the current status of the project. As the schedule is updated, it is important to ensure that the schedule accurately reflects how the work is being performed.

> **IMPORTANT: TO VERIFY THAT THE SCHEDULE UPDATES ARE CORRECT, IT IS NECESSARY FOR FIELD STAFF TO COLLECT AS-BUILT INFORMATION THROUGH A VARIETY OF SOURCES. SOURCES INCLUDE, BUT ARE NOT LIMITED TO, DAILY WORK REPORTS (DWRS), MEETING MINUTES, AND PROGRESS PHOTOGRAPHS/VIDEOS. (NOTE: IT IS RECOMMENDED TO DOCUMENT THE ACTUAL FINISH DATES FOR COMPLETED ACTIVITIES IN THE DAILY WORK REPORTS (DWRS)).**

Use the **CPM Schedule Update Checklist form** to analyze the current progress, ensure compliance with Section 108.03 of the Specifications, and determine potential needs for a schedule revision.

General

Activity Status. It is important for schedule updates to provide the as-built status of the project. The Contractor is required to provide actual start and finish dates of each activity or remaining durations of activities started but not yet completed.

Out of Sequence Progress. Any activities that have posted progress without predecessors being completed are not allowed with written approval of the District Supervisor.

Updated Critical Path. The critical path (shortest duration in which the project may be completed) may change if non-critical activities are delayed more than the available float. A change in the critical path may extend the completion date of an interim milestone or the project. If a scheduled milestone or project completion date is delayed 15% or more behind schedule, the District Supervisor may request a revised schedule that reflects timely completion.

Submission Requirements

See CPM Submission Requirements

Narrative Report

Each schedule update shall include a Narrative report, as outlined in CPM Submission Requirements, and including the following:

Sources of delay with a detailed history of the delay, corrective action, and schedule adjustments to correct the delay;

Work planned for the succeeding update period;

Pending change orders; and

Changes made to the CPM schedule. Changes include additions, deletions, or revisions to activities due to the issuance of a change order, changes to an activity duration, changes to relationships between activities, or changes to the planned sequence of Work or the method and manner of its performance including any schedule changes due to changes in the planning or progress of the Work.

Note: It is recommended to have the Contractor comment on the narrative report regarding progress of any on-going activities greater than 20 days in duration.

Progress Assessment

Upon receiving each schedule update, progress will need to be assessed to determine if actual construction has fallen behind the plan of operations or schedule by more than 15% or 60 calendar days. When this occurs, the Contractor shall offer for approval a revised schedule that reflects timely completion. Otherwise, the District Supervisor may request a revised schedule.

A quick calculation of time versus money can be calculated using TIME COMPLETE (%) and WORK COMPLETE (%) from the most recent ESTIMATE in Site Manager. TIME COMPLETE (%) minus WORK COMPLETE (%) will result in the delay based on the straight-line method.

Circumstances that May Lead to Requesting a Revised Schedule

The District Supervisor may request a revised schedule under the following circumstances:

15% or more behind schedule - A delay (actual or projected) to a scheduled milestone or project completion date of 15% or more warrants requesting a revised schedule.

Difference in actual sequence or duration of work - A difference between the actual sequence or duration of work and that depicted in the schedule warrants requesting a revised schedule. The revision is necessary to correct unrealistic activity durations or a significant number of activities that are being performed out-of-sequence.

Alteration by Change Order - The issuance of a Change Order that alters the planned sequence of work or the method and manner of its performance by adding, deleting, or revising activities warrants requesting a revised schedule.

Schedule Revisions

A revision of the baseline CPM schedule is required when the schedule has been significantly impacted by a change in the Work or condition or the Contractor has deviated significantly from his baseline plan or schedule.

The Contractor may offer a revised schedule, or the District Supervisor may request one. Circumstances that may lead to requesting a revised schedule are addressed in the **CPM Schedule Update Checklist form** and in Section 108.03(D) of the Specifications.

If the Contractor cannot justify unsatisfactory progress, administrative actions can be made in accordance with Section 108.03(D) of the Specifications.

Communication with the Contractor

Upon review of the CPM schedule and related materials, the District Supervisor will either:

Provide review comments,

Request additional information,

Accept the CPM schedule, or

Reject the CPM schedule

Providing review comments

General review comments may be provided verbally, noted in meeting minutes, or in writing. No formal letter is required.

Template Letters

Template Letters are available on the Construction Division's Website and Construction Job Box.

Time Impacts and Delays

If the Contractor has been delayed because of conditions beyond their control and they are without fault, then a time extension may be justified.

The Contractor shall notify the District Supervisor in accordance with Section 104.03 of the Specifications and submit a written request for a time extension. The written request shall include a Time Impact Analysis and supporting documentation showing the impact of the delay on the critical path.

In accordance with Section 108.07 of the Specifications, the District Supervisor may extend the contract time or completion date only if an excusable delay affects the critical path of the work as shown on the accepted progress schedule.

Time Impact Analysis (TIA)

Time Impact Analysis (TIA) is a 'forward-looking,' prospective schedule analysis technique that adds a modeled delay to an accepted CPM schedule to determine the possible impact of that delay to project completion.

The TIA provides a reasonable assessment of a delay when applied appropriately. The TIA must be calculated quickly, while the project is on-going, and is best when modeling the effects of a single change or delay event.

The TIA relies on the CPM calculations to show the differences between two schedules:

A schedule that does not include a delay, and

A schedule that does include an activity modeling the delay event.

The difference in project completion dates is considered to be the impact of the delay for time duration considerations.

There are two assumptions that make TIA possible. The first assumption is that the most recent schedule update, just before the delay, accurately displays the status of work activities on the project at the time of delay. Therefore, timely acceptance of schedule updates is critical to the TIA success. The second assumption is that actual delay will not change the remaining work plan. Essentially, the work both prior to and following the delay remain unchanged, or 'frozen'.

When TIA is appropriate and all assumptions are met, it is a simple and effective method for modeling the effects of a delay.

Steps of TIA

According to Section 108.07 of the Specifications, the Contractor is responsible for performing the TIA. These are the steps they are expected to perform:

Create activity/s to represent delay.

Insert into most recent update, but w/ zero duration.

Run network calculations. Dates should remain unchanged.

Input Approved durations into delay activity/s.

Recalculate CPM.

Determine total time impact, and then remove any delays already awarded.

TIA Deliverables

The support is very important when processing a time extension using TIA. At a minimum, the deliverables of a TIA should include:

A written request for a time extension.

Two schedules with supporting documents (narrative, tables, reports):

The most recent schedule update, just prior to the delay.

A schedule that includes an activity modeling the delay event.

Support: Primavera Power-Users

Within the Construction Division, there are Power- Users who have access to Primavera software, and advanced knowledge in CPM schedules. These Power-Users are available as a resource to provide assistance (such as running reports, or checking the TIA) as needed. To identify each Power-User and their contact information, please contact your Regional Business Development Unit.

Online Webinar recordings of Primavera P6 training are available. Go to the TDOT Learning Network and search "Primavera P6 Scheduling".

Compensation

The Department will measure and pay for CPM Project Schedule in accordance with 108.11 and 108.12, respectively, which can be found in the 100 Supplemental Specifications (9-7-21).

Construction CPM Project Schedule will be measured as a percentage of the lump sum price bid for the completion of the work specified in 108.03C and partial payment will be made according to the schedule in Table 108.11-1.

LINKS TO FORMS:

Initial Project Schedule Checklist 10.8.21
Baseline CPM Schedule Checklist 10.8.21
CPM Schedule Updates Checklist 10.8.21

CPM Schedule Acceptance Letter
CPM Schedule Rejection Letter
CPM Schedule Request Additional Information Letter

CIRCULAR LETTER

SECTION: **108.07 DETERMINATION OF TIME FOR COMPLETION**
NUMBER: **108.07-01**
SUBJECT: **DETERMINATION OF TIME BASED ON QUANTITY INCREASES**
DATE: **MARCH 1, 2024**

If the Project does not require a CPM schedule, and satisfactory fulfillment of the Contract requires a change to the Work in accordance with **104.02**, which may require a time extension, evaluate the Contractor's request, and determine whether the change has affected the completion of the Project. If the change resulted in an increase in quantities for a major item of work, as defined in **101.03**,and impacted controlling activities of the schedule, the Engineer may proportionally increase the Contract time allowed for performance of the major item of work.

The determination of contract completion dates assumes the controlling activities and normal production rates dependent on the type and size of contract. It also assumes that many items of work are completed concurrently with the controlling activities. When reviewing the increase to major items, existing change orders for major items that have statements that no additional time will be granted or statements that have time granted shall not be considered.

If it is determined that the increase in quantities for major items affected the controlling activities of the project, thus affecting project completion, then additional time allowance shall be made as follows:

AT = (MI / OCA) * OCT

Where AT = Additional contract time (days)
MI = sum of the additional cost of the major items ($)
OCA = Original contract amount ($)
OCT = Original contract time (days)

Example:
Original contract amount (OCA) = $1,000,000.00
Original contract time (OCT) = 150 days
Sum of additional cost (MI) = $150,000.00

AT = ($150,000.00/$1,000,000.00)*150 days = 22.5, say 23 days

form: Determination Of Time Based On Quantity Increases

To complete the additional contract time process, complete the form, the Team Lead and District Manager must sign form, and then create a zero dollar Change Order in SiteManager. The Change Order will be a zero dollar and always stay in draft status. Include the completed and signed form in SiteManager as supporting documentation for the Change Order.

Submit the completed Determination Of Time Based On Quantity Increases form by email to the Finance Division to notify them of the Change Order. Finance will review and adjust the completion date for the additional contract time in SiteManager.

CIRCULAR LETTER

SECTION: 109.01 MEASUREMENT OF QUANTITIES
NUMBER: 109.01-01
SUBJECT: ELECTRONIC TICKET DELIVERY SYSTEM
DATE: April 22, 2022

Description

TDOT will be using Special Provisions 109ETAS Regarding Electronic Ticket Delivery System for Asphalt (e-ticketing) and/or Special Provision 109ETC Regarding Electronic Ticket Delivery System for Concrete (e-ticketing) on certain projects. The special provisions require that the Contractor use an e-ticketing system for asphalt and/or concrete mixtures delivered to the project site.

Requirements

A. Special Provision 109ETAS

It is the responsibility of the TDOT Field Office and Inspectors to ensure that the requirements listed in the Special Provision 109ETAS are met. The Contractor will provide electronic Certified Public Weigher e-tickets for each load of asphalt mixture that is delivered to the project. The e-tickets are required to be automatically generated using a combined software and hardware fleet management system or an e-ticketing delivery system. The e-ticketing system will be required to fully integrate with the load read out scale system used to weigh the mixture being delivered. The Special Provision requires that the e-ticketing system will be capable of maintaining the data offline due to loss of power or connectivity.

The Special Provision requires the Contractor to provide real time continuous ticketing system access to the Department for the duration of the project using a web-based application. The e-ticketing delivery system that the Contractor plans to use shall be presented to TDOT and agreed upon before initial use on the project. TDOT will be granted access before any asphalt is delivered to the project. It will be the Contractor's responsibility to provide on-site technical assistance as needed during the project to operate the system. **Do not allow delivery of any asphalt mixture to the project that will use the e-ticketing system before an agreement has been reached concerning which system is to be used and TDOT has access. HQ Construction and HQ Materials and Test may provide support.**

If the e-ticketing system malfunctions, the inspector should immediately notify the Contractor's foreman or superintendent. It is expected that the Contractor will immediately seek technical assistance from his e-ticketing service provider, notify the plant that there is an issue, and take proactive steps to resolve the issue. The Contractor may continue to deliver loads of asphalt to the project accompanied by paper tickets as outlined in Standard Specification **109.01.E** for the current shift. The Contractor may work one additional shift providing paper tickets and e-tickets for each load delivered to ensure that all issues are resolved. If the issue with the e-ticketing system is not resolved by the end of the additional shift, the Contractor will be instructed not to begin another work shift involving loads of asphalt until the issue(s) is resolved.

TDOT inspectors should record asphalt temperatures, per guidance in the SOP, in the Comments section of the e-tickets. Any loads that are rejected should be noted as such in the Comments section. Document the reason for rejecting the load. Check the daily summary of e-tickets for compliance with

legal truck weight limits and highlight any loads exceeding the legal limits. No payment will be issued for loads exceeding the legal truck weight limit.

B. Special Provision 109ETC

It is the responsibility of the TDOT Field Office and Inspectors to ensure that the requirements listed in the Special Provision 109ETC are met. The Contractor will provide electronic Certified Plant Technician e-tickets for each load of concrete mixture that is delivered to the project. The e-tickets are required to be automatically generated using a combined software and hardware fleet management system or an e-ticketing delivery system. The e-ticketing system will be required to fully integrate with the load read out scale system used to batch the mixture being delivered. The Special Provision requires that the e-ticketing system will be capable of maintaining the data offline due to loss of power or connectivity.

The Special Provision requires the Contractor to provide real time continuous ticketing system access to the Department for the duration of the project using a web-based application. The e-ticketing delivery system that the Contractor plans to use shall be presented to TDOT and agreed upon before initial use on the project. TDOT will be granted access before any concrete is delivered to the project. It will be the Contractor's responsibility to provide on-site technical assistance as needed during the project to operate the system. **Do not allow delivery of any concrete mixture to the project that will use the e-ticketing system before an agreement has been reached concerning which system is to be used and TDOT has access. HQ Construction and HQ Materials and Test may provide support.**

If the e-ticketing system malfunctions, the inspector should immediately notify the Contractor's foreman or superintendent. It is expected that the Contractor will immediately seek technical assistance from his e-ticketing service provider, notify the plant that there is an issue, and take proactive steps to resolve the issue. The Contractor may continue to deliver loads of concrete to the project accompanied by paper tickets as outlined in Standard Specification **604.03** for the current shift. The Contractor may work one additional shift providing paper tickets and e-tickets for each load delivered to ensure that all issues are resolved. If the issue with the e-ticketing system is not resolved by the end of the additional shift, the Contractor will be instructed not to begin another work shift involving loads of concrete until the issue(s) is resolved.

TDOT inspectors should verify ticket information, per guidance in the Standard Specifications, circular letters and SOP. Any loads that are rejected should be noted as such in the Comments section. Document the reason for rejecting the load.

CIRCULAR LETTER

SECTION: **109.01 MEASUREMENT OF QUANTITIES**
NUMBER: **109.01-02**
SUBJECT: **TRUCK WEIGHT LIMITS**
DATE: **MARCH 28, 2023**

The Department now will require that all weight tickets conform to the new limits outlined on these sheets as required by law.

Interstate weight limits shall apply when hauling on any of the following:

a) Ramps entering or exiting the interstate system.
b) Any portion of an existing interstate open or previously opened to traffic.
c) The surface course of a new interstate facility (never opened to public traffic). However, Non-Interstate Highway limits will apply to hauling on the subgrade or base courses of newly constructed interstate widening projects if accessed by non-interstate routes.
d) New and existing structures on interstates.

In consideration of the status of construction, relative to the present federal interstate system, it is considered that the above determinations provide adequate guidance as to the applicability of interstate truck weights.

Loads in excess of the Legal Weight Limit (LWL) shall be rejected and no payment will be issued with the exception for asphalt millings hauled from the roadway cold planing operation, where a scale is not available, to the off-load site.

Cold Planing - Asphalt Millings

The following guidelines are established regarding payment for a truck load of asphalt millings where the total weight exceeds the allowable Legal Weight Limit. These guidelines only apply to pay item ”415-01.01 COLD PLANING BITUMINOUS PAVEMENT, TON”.

For a truck load with more than 2000 LBS (1 ton) over the allowable LWL, the entire load will NOT be paid for.

Payment for each truck load that is 2000 pounds or less over the LWL will be as follows:

1. The portion of the truck load that is less than or equal to the LWL will be paid at the Contract bid price by the Ton.
2. The portion of the truck load that is over the LWL but 2000 pounds or less, will not be paid for and will be deducted a sum of $0.10 (10 cents) per pound, not as a penalty but as liquidated damages, for each pound over the LWL.
3. The deduction will be assessed using Item 415-01.90, Overweight Cold Planing Damage, Dollar.

To receive payment for truck loads over the LWL, the Contractor shall provide TDOT a list of all truck loads that are over the LWL with the following information: the legal/allowable maximum gross weight (LWL), actual gross weight, actual tare weight, actual net weight, the amount overweight, and the amount of deduction and liquidated damages. The list shall be submitted at the end of each work week that Work was performed.

EXAMPLE 1:
Assume:
Maximum allowable weight per Bridge Weight Formula= 58,000 LBS (29.00 tons)
Tare weight= 28,000 LBS (14.00 Tons)
Allowable Net weight= 30,000 LBS (15.0 tons)
Actual Gross weight= 59,300 LBS (29.65 Tons)
Actual Net weight= 31,300 LBS (15.65 tons)
Bid price for 415-01.01 COLD PLANING BITUMINOUS PAVEMENT= $30.00/Ton

Truck is overweight by 1,300 LBS (0.65 tons), but less than 2000 LBS, therefore payment will be for 15 tons of Millings ($450) and a liquidated damage of $130 (1300 LBS x $0.10) will be assessed.

EXAMPLE 2:
Assume:
Maximum allowable weight per Bridge Weight Formula= 58,000 LBS (29.00 tons)
Tare weight= 28,000 LBS (14.00 Tons)
Allowable Net weight= 30,000 LBS (15.0 tons)
Actual Gross weight= 60,760 LBS (30.38 Tons)
Actual Net weight= 32,760 LBS (16.38 tons)
Bid price for 415-01.01 COLD PLANING BITUMINOUS PAVEMENT= $30.00/Ton

Truck is overweight by 2,760 LBS (1.38 tons), therefore no payment will be made for the truckload.

SECTION I: Non-Interstate Highway

1) Two axle truck (one front, one rear)
   20,000# each axle
   Maximum gross weight = 40,000# *

2) Three axle straight (one front, tandem rear)
   Front axle = 20,000#
   Tandem axle = 34,000#
   Maximum gross weight = 54,000# *

   Exception: Class 9 tag or zone tag
   Maximum gross weight = 66,000# *

3) Four axle straight (one front, three rear)
   Front axle = 20,000#
   Single axle rear = 20,000#
   Tandem axle = 34,000#
   Maximum gross weight = 74,000# *

4) Three axle truck tractor and trailer (one axle front of tractor, one rear of tractor, one rear of trailer)
   Front axle = 20,000#
   Rear axle Tractor = 20,000#
   Rear axle Trailer = 20,000#
   Maximum gross weight = 60,000# *

5) Four axle truck tractor and trailer (one front of tractor, one rear of tractor, tandem rear of trailer)
   Front axle Tractor = 20,000#
   Rear axle Tractor = 20,000#
   Tandem axle Trailer = 34,000#
   Maximum gross weight = 74,000# *

6) Four axle truck tractor and trailer (one front of tractor, tandem rear of tractor, one rear of trailer)
   Front axle Tractor = 20,000#
   Tandem rear Tractor = 34,000#
   Single axle Trailer = 20,000#
   Maximum gross weight = 74,000# *

7) Five axle tractor and trailer (one front of tractor, tandem rear of tractor, tandem rear of trailer)
   Maximum gross weight = 80,000# *

   ***** Loads in excess of the Legal Weight limit shall be rejected and no payment will be issued.

SECTION II: Interstate Highway

Per Section 107.02 of the Standard Specifications, all trucks delivering material (rock, asphalt, concrete, etc.) to construction projects shall display the allowable gross weight for the Interstate System on the side of the truck. The Bridge Formula shall be used to determine Interstate System gross weights as defined below and in the attached Bridge Formula Weights brochure:

Weight Distribution Formula (Bridge Formula)

$$W = 500\ ((L\ N)/(N-1) + 12N + 36)$$

W = overall gross weight
N = number of axles under consideration
L = distance in feet between extremes of axles under consideration

Updated copy of Bridge Formula Weights brochure is attached.

Note

The Federal Highway Administration (FHWA) revises its guidance pamphlet Federal Bridge Formula Weights (May 2015). Previous editions of this guidance pamphlet are superseded and no longer valid. This guidance paraphrases provisions of 23 U.S.C. § 127 and 23 C.F.R. § 658 for purposes of illustration only. In the event of a dispute, the statute and regulation take precedence with respect to maximum allowable Federal Bridge Formula weights.

U.S. Department of Transportation
Federal Highway Administration

Office of Freight Management and Operations
Phone: 202-366-0408
Web site: https://ops.fhwa.dot.gov/freight

August 2019

FHWA-HOP-19-028

Bridge Formula Weights

August 2019

U.S. Department of Transportation
Federal Highway Administration

Bridge Formula Weights

With a few exceptions noted in this pamphlet, the Bridge Formula establishes the maximum weight any set of axles on a motor vehicle may carry on the Interstate highway system. This pamphlet describes the Bridge Formula, why it was established, and how it is used.

What Is It?

Congress enacted the Bridge Formula in 1975 to limit the weight-to-length ratio of a vehicle crossing a bridge. This is accomplished either by spreading weight over additional axles or by increasing the distance between axles.

Compliance with Bridge Formula weight limits is determined by using the following formula:

$$W = 500 \left[\frac{LN}{N-1} + 12N + 36 \right]$$

W = the overall gross weight on any group of two or more consecutive axles to the nearest 500 pounds.

L = the distance in feet between the outer axles of any group of two or more consecutive axles.

N = the number of axles in the group under consideration.

In addition to Bridge Formula weight limits, Federal law states that single axles are limited to 20,000 pounds, and axles spaced more than 40 inches and not more than 96 inches apart (tandem axles) are limited to 34,000 pounds. Gross vehicle weight is limited to 80,000 pounds (23 U.S.C. 127).

Is the Formula Necessary?

Bridges on the Interstate System highways are designed to support a wide variety of vehicles and their expected loads. As trucks grew heavier in the 1950s and 1960s, something had to

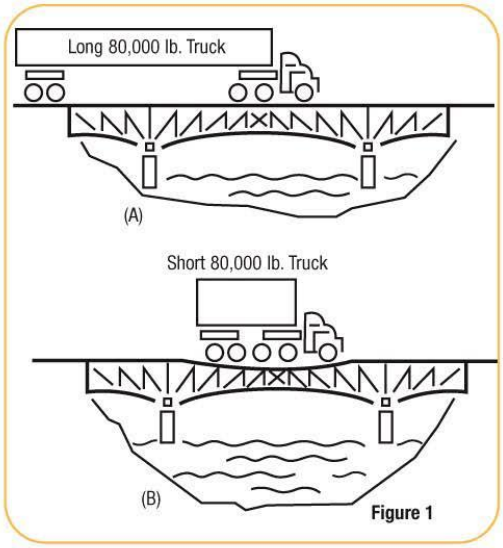

Figure 1

be done to protect bridges. The solution was to link allowable weights to the number and spacing of axles.

Axle spacing is as important as axle weight in designing bridges. In Figure 1A, the stress on bridge members as a longer truck rolls across is much less than that caused by a short vehicle as shown in Figure 1B, even though both trucks have the same total weight and individual axle weights. The weight of the longer vehicle is spread out, while the weight of the shorter vehicle is concentrated on a smaller area.

How Is the Formula Used?

The weight on various axle configurations must be checked to determine compliance with the Bridge Formula. Three definitions are needed to use the Bridge Formula correctly.

Gross Weight—the weight of a vehicle or vehicle combination and any load thereon. The Federal gross weight limit on the Interstate System is 80,000 pounds unless the Bridge Formula dictates a lower weight limit.

Single-Axle Weight—The total weight on one or more axles whose centers are spaced not more 40 inches apart. The Federal single-axle weight limit on the Interstate System is 20,000 pounds.

Tandem-Axle Weight—The total weight on two or more consecutive axles whose centers are spaced more than 40 inches apart but not more than 96 inches apart. The Federal tandem-axle weight limit on the Interstate System is 34,000 pounds.

Interstate System weight limits in some States may be higher than the figures noted above due to "grandfather" rights. When the Interstate System axle and gross weight limits were first adopted in 1956, and amended in 1975, States were allowed to keep or "grandfather" weight limits that were higher.

Bridge Formula calculations yield a series of weights (Bridge Table, pages 5-6). It is important to note that the single-axle weight limit replaces the Bridge Formula weight limit on axles not more than 40 inches apart, and the tandem-axle weight limit replaces the Bridge Formula weight limit for axles over 40 but not more than 96 inches apart. At 97 inches apart, for example, two axles may carry 38,000 pounds (Figure 2A), and three axles may carry 42,000 pounds, as shown in Figure 2B.

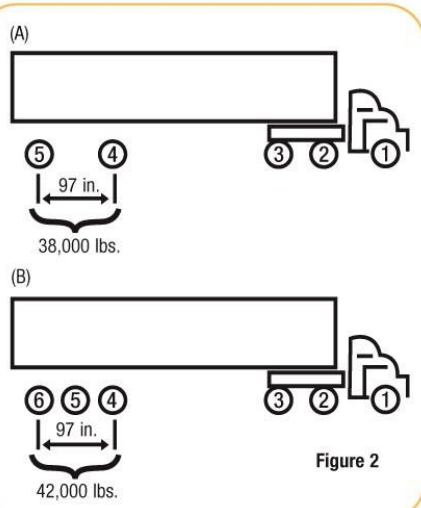

Figure 2

Federal law states that any two or more consecutive axles may not exceed the weight computed by the Bridge Formula even though single axles, tandem axles, and gross weight are within legal limits. As a result, the axle group that includes the entire truck—sometimes called the "outer bridge" group—must comply with the Bridge Formula. However, interior combinations of axles, such as the "tractor bridge" (axles 1, 2, and 3) and "trailer bridge" (axles 2, 3, 4, and 5), must also comply with weights computed by the Bridge Formula (Figure 3).

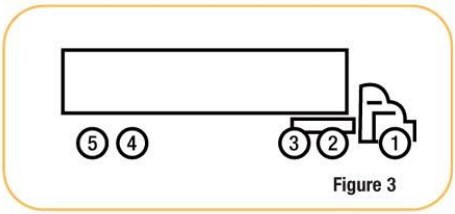

Figure 3

Figure 3 shows the most common vehicle checked for compliance with weight limit requirements. Although the Bridge Formula applies to each combination of two or more axles, experience shows that axle combinations 1 through 3, 1 through 5, and 2 through 5 are critical and must be checked. If these combinations are found to be satisfactory, then all of the others on this type of vehicle normally will be satisfactory.

The vehicle with weights and axle dimensions shown in Figure 4 is used to illustrate a Bridge Formula check.

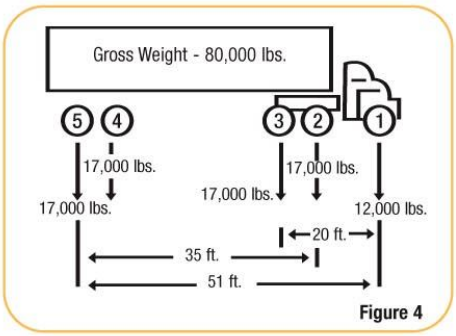

Figure 4

Permissible Gross Loads for Vehicles in Regular Operation[1]

Based on weight formula $W = 500\left[\frac{LN}{N-1} + 12N + 36\right]$

Distance in feet (L) between the extremes of any group of 2 or more consecutive axles

Maximum load in pounds carried on any group of 2 or more consecutive axles[2]

	L	N= 2 AXLES	3 AXLES	4 AXLES	5 AXLES	6 AXLES	7 AXLES	8 AXLES	9 AXLES
Tandem Axle Weight (see pages 3 & 4)	4	34,000	...	...	...	...	...	...	...
	5	34,000	...	...	...	...	...	...	...
	6	34,000	...	...	...	...	...	...	...
	7	34,000	...	...	...	...	...	...	...
	8	34,000	34,000	...	...	...	...	...	...
	More than 8/less than 9	38,000	42,000	...	...	...	...	...	...
	9	39,000	42,500	...	...	...	...	...	...
	10	40,000	43,500	...	...	...	...	...	...
	11	...	44,000	...	...	...	...	...	...
	12	...	45,000	50,000	...	...	...	...	...
	13	...	45,500	50,500	...	...	...	...	...
	14	...	46,500	51,500	...	...	...	...	...
	15	...	47,000	52,000	...	...	...	...	...
	16	...	48,000*	52,500	58,000	...	...	...	...
	17	...	48,500	53,500	58,500	...	...	...	...
	18	...	49,500	54,000	59,000	...	...	...	...
	19 Example	...	50,000	54,500	60,000	...	...	...	...
	20 (see page 7)	...	51,000	55,500	60,500	66,000	...	...	...
	21	...	51,500	56,000	61,000	66,500	...	...	...
	22	...	52,500	56,500	61,500	67,000	...	...	...
	23	...	53,000	57,500	62,500	68,000	...	...	...
	24	...	54,000	58,000	63,000	68,500	74,000	...	...
	25	...	54,500	58,500	63,500	69,000	74,500	...	...
	26	...	55,500	59,500	64,000	69,500	75,000	...	...
	27	...	56,000	60,000	65,000	70,000	75,500	...	...
	28	...	57,000	60,500	65,500	71,000	76,500	82,000	...
	29	...	57,500	61,500	66,000	71,500	77,000	82,500	...
	30	...	58,500	62,000	66,500	72,000	77,500	83,000	...
	31	...	59,000	62,500	67,500	72,500	78,000	83,500	...
	32	...	60,000	63,500	68,000	73,000	78,500	84,500	90,000
	33	...	...	64,000	68,500	74,000	79,000	85,000	90,500
	34	...	...	64,500	69,000	74,500	80,000	85,500	91,000
	35	...	...	65,500	70,000	75,000	80,500	86,000	91,500
	36	...	Exception (see page 9)	66,000	70,500	75,500	81,000	86,500	92,000
	37	...		66,500	71,000	76,000	81,500	87,000	93,000
	38	...	...	67,500	71,500	77,000	82,000	87,500	93,500
	39	...	...	68,000	72,000	77,500	82,500	88,500	94,000
	40	...	...	68,500	73,000	78,000	83,500	89,000	94,500
	41	...	...	69,500	73,500	78,500	84,000	89,500	95,000
	42	...	...	70,000	74,000	79,000	84,500	90,000	95,500
	43	...	...	70,500	75,000	80,000	85,000	90,500	96,000
	44	...	...	71,500	75,500	80,500	85,500	91,000	96,500
	45	...	...	72,000	76,000	81,000	86,000	91,500	97,500
	46	...	...	72,500	76,500	81,500	87,000	92,500	98,000
	47	...	...	73,500	77,500	82,000	87,500	93,000	98,500
	48	...	...	74,000	78,000	83,000	88,000	93,500	99,000
	49	...	...	74,500	78,500	83,500	88,500	94,000	99,500
	50	...	...	75,500	79,000	84,000	89,000	94,500	100,000
	51	...	...	76,000	80,000	84,500	89,500	95,000	100,500
	52	...	...	76,500	80,500	85,000	90,500	95,500	101,000
	53	...	...	77,500	81,000	86,000	91,000	96,500	101,500
	54	...	...	78,000	81,500	86,500	91,500	97,000	102,000
	55	...	...	78,500	82,500	87,000	92,000	97,500	102,500
	56	...	Interstate Gross Weight Limit (see page 2)	79,500	83,000	87,500	92,500	98,000	103,000
	57	...		80,000	83,500	88,000	93,000	98,500	104,000
	58	...	...	...	84,000	89,000	94,000	99,000	104,500
	59	...	...	...	85,000	89,500	94,500	99,500	105,000
	60	...	...	...	85,500	90,000	95,000	100,500	105,500

[1]The values in this table reflect FHWA's policy of rounding down when calculated weights fall exactly halfway between 500-pound increments. Because the Bridge Formula is designed to protect highway infrastructure, FHWA determined that this conservative policy is consistent with the statutory mandate.

Fn. 2 Pursuant to 23 CFR § 650.3 13, all bridges must be inspected, rated to safe load-carrying capacity, and if required, posted or restricted with respect to the maximum allowable weight.

Before checking for compliance with the Bridge Formula, a vehicle's single-axle, tandem-axle, and gross weight should be checked. Here the single axle (number 1) does not exceed 20,000 pounds, tandems 2-3 and 4-5 do not exceed 34,000 pounds each, and the gross weight does not exceed 80,000 pounds. Thus, these preliminary requirements are satisfied. The first Bridge Formula combination is checked as follows:

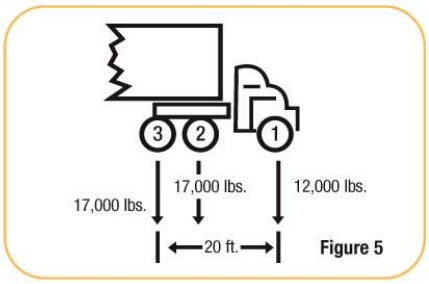

Figure 5

Check axles 1 through 3 (Figure 5)

Actual weight = 12,000 + 17,000 + 17,000 = 46,000 pounds.

N = 3 axles

L = 20 feet

$$W = 500 \left[\frac{LN}{N-1} + 12N + 36 \right]$$

$$W = 500 \left[\frac{(20 \times 3)}{(3 - 1)} + (12 \times 3) + 36 \right] = 51{,}000 \text{ lbs.}$$

Maximum weight (W) = 51,000 pounds, which is more than the actual weight of 46,000 pounds. Thus, the Bridge Formula requirement is satisfied.

Example From the Bridge Table (pages 5 & 6)
The same number (51,000 pounds) could have been obtained from the Bridge Table by reading down the left side to L = 20 and across to the right where N = 3.

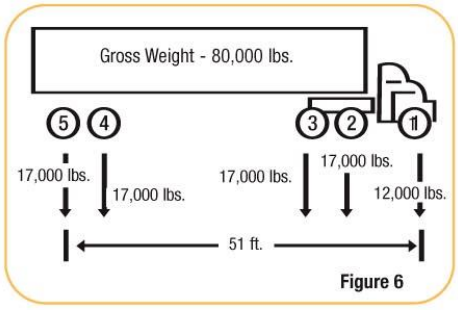

Figure 6

Now check axles 1 through 5 (Figure 6)

Actual weight = 12,000 + 17,000 + 17,000 + 17,000 + 17,000 = 80,000 pounds.

Maximum weight (W) = 80,000 pounds (Bridge Table for "L" of 51 feet and "N" of 5 axles).

Therefore, this axle spacing is satisfactory.

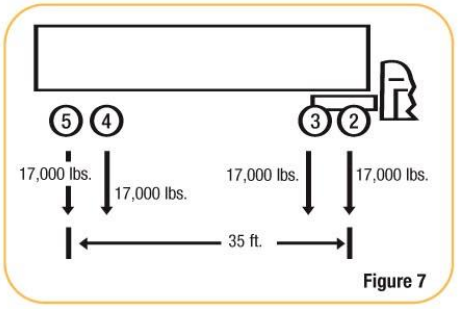

Figure 7

Now check axles 2 through 5 (Figure 7)

Actual weight = 17,000 + 17,000 + 17,000 + 17,000 = 68,000 pounds.

Maximum weight (W) = 65,500 pounds (Bridge Table for "L" of 35 feet and "N" of 4 axles).

This is a violation because the actual weight exceeds the weight allowed by the Bridge Formula. To correct the situation, some load must be removed from the vehicle or the axle spacing (35 feet) must be increased.

Exception to Formula and Bridge Table

In addition to the grandfather rights noted on page 3, Federal law (23 U.S.C. 127) includes one other exception to the Bridge Formula and the Bridge Table—two consecutive sets of tandem axles may carry 34,000 pounds each if the overall distance between the first and last axles of these tandems is 36 feet or more. For example, a five-axle tractor-semitrailer combination may carry 34,000 pounds both on the tractor tandem (axles 2 and 3) and the trailer tandem (axles 4 and 5), provided axles 2 and 5 are spaced at least 36 feet apart. Without this exception, the Bridge Formula would allow an actual weight of only 66,000 to 67,500 pounds on tandems spaced 36 to 38 feet apart.

Bridge Formula Application to Single-Unit Trucks

The procedure described above could be used to check any axle combinations, but several closely spaced axles usually produce the most critical situation.

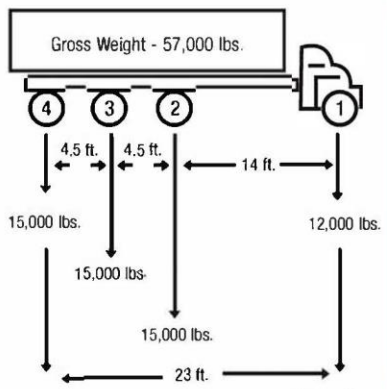

Figure 8

The truck shown in Figure 8 satisfies the single-axle weight limit (12,000 pounds are less than 20,000 pounds), the tandem-axle limit (30,000 pounds are less than 34,000 pounds) and the gross-weight limit (57,000 pounds are less than 80,000 pounds). With these restrictions satisfied, a check is done for Bridge Formula requirements, axles 1 through 4.

Actual Weight= 12,000 + 15,000 + 15,000 + 15,000 = 57,000 pounds.

Maximum weight (W) = 57,500 pounds (Bridge Table for "L" of 23 feet and "N" of 4 axles).

Since axles 1 through 4 are satisfactory, check axles 2 through 4:

Actual weight = 15,000 + 15,000 + 15,000 = 45,000 pounds.

Maximum weight (W) = 42,500 pounds (Bridge Table for "L" of 9 feet and "N" of 3 axles).

This is a violation because the actual weight exceeds the weight allowed by the Bridge Formula. The load must either be reduced, axles added, or spacing increased to comply with the Bridge Formula.

Quality Assurance Statement

The Federal Highway Administration (FHWA) provides high-quality information to serve Government, industry, and the public in a manner that promotes public understanding. Standards and policies are used to ensure and maximize the quality, objectivity, utility, and integrity of its information. The FHWA periodically reviews quality issues and adjusts its pro-grams and processes to ensure continuous quality improvement.

CIRCULAR LETTER

SECTION: **109.02 SCOPE OF PAYMENT**
NUMBER: **109.02-01**
SUBJECT: **SCOPE OF PAYMENT**
DATE: **SEPTEMBER 1, 2017**

PRICE ADJUSTMENTS

Upon receiving monthly indices for price adjustment items, the proper payment adjustment should be reflected on the next current estimate.

When any adjustments are made on estimates due to penalties, content or price variations, the contractor should be furnished a copy of the computations and explanation, therefore. All documentation should be uploaded into SiteManager.

TEST REPORTS

On all estimates, compare all pay quantities to the test reports or required certifications to assure that all items on the estimate are covered by the necessary in hand test reports or certifications.

Payment for stockpiled material may still be made as per Subsection **109.09** of the Standard Specifications.

Using this procedure should not delay the processing of estimates or change the cut off dates for the estimate period since materials used in the work are supposed to show evidence of having been inspected or tested prior to their being used. Thus, a Test Report or Certification should be readily available.

If the test report or certification is produced by the Department, payment for an item may be made based on a verbal approval from the Region. However, the respective Test Report or Certification shall be "in hand" on the subsequent estimate period or payment for the item shall be removed from the progress payment.

DOCUMENTATION OF QUANTITIES FOR PROGRESS PAYMENT

The Engineer will keep a book (electronic) in which the current quantities for each item in the contract is shown. Show the calculations for each item in this book or if copied from other records, reference back by book and page or sheet to the original notes.

CIRCULAR LETTER

SECTION: **109.02 SCOPE OF PAYMENT**
NUMBER: **109.02-05**
SUBJECT: **CERTIFICATION OF PROMPT PAYMENT AND DBE/SBE SUMMARY**
DATE: **MARCH 15, 2024**

The Standard Specifications, in accordance with TCA, Section 12-4-707, and 49 CFR 26.29 require the Prime Contractor to pay each subcontractor, material supplier, and hauler no later than 30 days from receipt of each payment the Prime Contractor receives from the Department. In addition, all subcontractors, at all tiers, must make payment no later than 30 days to each subcontractor, material supplier, and hauler for work and/or material provided for the project once they receive payment from the prime contractor or subcontractor.

In order to validate this payment, the Prime Contractor shall certify each month that payments have been made. The certification shall run no more than 2 months in arrears. If circumstances arise where payment to the subcontractors, material suppliers, or haulers has not been made, the Prime Contractor shall list reasons for nonpayment in the comments field. Also, the Prime Contractor shall be required to enter all subcontractors, material suppliers, or haulers where joint checks are utilized separately and note in the comments field that a joint check was issued.

When exceptions or joint check subcontractors are listed, the Team Lead shall notify the Director of Construction and the District Office.

The Subcontractor Prompt Payment Report shall be run at estimate time and then reviewed for accuracy and completeness. Estimate payments shall not be processed until the Prime Contractor has entered and approved all subcontractors, materials suppliers, and haulers that performed work during the specified time frame.

If any subcontractor, material supplier, or hauler disagrees with the information submitted by the Prime Contractor, the progress payment can be processed but the field office shall work with the Region and/or Headquarters Construction to resolve the disagreement/dispute as soon as possible. Final estimate payment shall not be made until a resolution is reached and corrective entries noted in the system.

CIRCULAR LETTER

SECTION: **109.02 SCOPE OF PAYMENT**
NUMBER: **109.02-05.01**
SUBJECT: **CERTIFICATION OF PROMPT PAYMENT AND DBE/SBE SUMMARY**
DATE: **NOVEMBER 2, 2018**

Projects let prior to August 2018 will follow guidance provided within this circular letter. Effective with the August 2018 letting, prompt payment requirements should follow guidance provided in Circular Letter 109.02-05.

The Standard Specifications, in accordance with **TCA, Section 12-4-707**, and 49 CFR 26.29 requires the Prime Contractor to pay each subcontractor and material supplier no later than 30 days from receipt of each payment the Prime Contractor receives from the Department. In addition, all subcontractors, at all tiers, must make payment no later than 30 days to each subcontractor and material supplier for work and/or material provided for the project once they receive payment from the prime contractor or subcontractor.

In order to validate this payment, the Prime Contractor shall certify each month that these payments have been made. The certification shall run no more than 2 months in arrears. If circumstances arise where payment to the subcontractors has not been made, the Prime Contractor shall list reasons for nonpayment and note whether or not the subcontractors are Disadvantaged Business Enterprises (DBE) or Small Business Enterprises (SBE)* in the exception block. Also, the Prime Contractor shall be required to list all subcontractors or material suppliers where joint checks are utilized and note whether or not the subcontractors or material suppliers are DBEs/SBEs in the joint checks box.

Once completed by the contractor, the Certification Regarding Prompt Payment to Subcontractors and Material Suppliers and DBE/SBE Payment Summary shall be submitted electronically in excel to both the Project Supervisor and the Small Business Development / DBE Office via: DBE.runningtally@tn.gov within one email submission. This form can be found on the Headquarters Construction Website. Copies of joint checks for DBEs/SBEs shall be attached to the email.

When exceptions or joint check subcontractors are listed, the Project Supervisor shall forward copies of the Certification to the Director of Construction and the Regional Construction office.

Monthly progress payments shall not be processed without this certification.

Use of the form Certification Regarding Prompt Payment to Subcontractors and Material Suppliers and DBE/SBE Payment Summary is required for contracts beginning with the September 14, 2012 Letting.

* Small Business Enterprise (SBE) as certified with the Governor's Office of Diversity Business Enterprise's Go-DBE System. All small businesses are encouraged to apply for certification with the Go-DBE System. More information is available at GoDBE.

Prompt Payment Form

CIRCULAR LETTER

SECTION: **109.03 COMPENSATION FOR ALTERED QUANTITIES**
NUMBER: **109.03-01**
SUBJECT: **OVERRUN AND UNDERRUN EXPLANATIONS**
DATE: **OCTOBER 2, 2015**

Explanations for overruns and underruns on revised estimates are to be provided in accordance with the following guidelines:

1. Explanations are to be given if an item is not used.

2. Explain items covered by a Supplemental Agreement by referring to the Supplemental Agreement, e.g., "See Supplemental Agreement No.--."

3. Explain items covered by a Plans Revision by referring to the Plans Revision, e.g., "See Plans Revision dated ------."

4. Explanations are to be given for overruns or underruns on major items (as defined in Subsection 101.03 of the Standard Specifications) if the quantity varies from the original quantity by 10% or more.

5. Explanations are to be given if the Engineer extends time due to overruns in accordance with Subsection 108.07 of the Standard Specifications.

6. Explanations are to be given for overruns and underruns due to other factors considered significant by the District Supervisor.

Explanations for changes not consistent with the above will be required if deemed significant by the Regional Operations Office, Headquarters Construction Office or Federal Highway Administration.

CIRCULAR LETTER

SECTION: **109.04 ADDITIONAL OR ALTERED WORK**
NUMBER: **109.04**
SUBJECT: **DOCUMENTATION AND METHOD OF PAYMENT**
DATE: **OCTOBER 2, 2015**

All price adjustments must be submitted in accordance with **Subsections 104.02 and 104.03**.

1. Change Order – This method is applicable when the Department and the Contractor can agree on equitable prices for the extra work. The procedures relating to major and minor changes in the Department's **Policy Number 355-01**, **Approval of Construction Change Orders and Force Account Work,** are to be followed for extra work covered by Change Order. The descriptions of the bid items, bid item numbers, and units of measure in the Change Orders should be obtained from the SiteManager Item Master. If an item of extra work is not covered in the SiteManager Item Master, the necessary bid item descriptive data shall be obtained from the Headquarters Construction Division.

2. Force Account – This method is applicable when the Department and the contractor are unable to agree on equitable prices for the extra work. The extra work must prove to be more cost effective than bidding the work. Prior approval for extra work performed by force account also is required in accordance with the procedures relating to major and minor changes in the Department's **Policy Number 355-01**, **Approval of Construction Change Orders and Force Account Work**. In all cases, detailed cost records must be kept by the Operations District Supervisor as prescribed in **Subsection 109.04** to fully support all billings for the work. The line item for the force account work on the Estimate Summary to Contractor should show the following information:

Bid Item Number:	109-04
Description:	Force Account
Unit of Measurement:	Dollar

CIRCULAR LETTER

SECTION: **109.05 ELIMINATED OR ALTERED ITEMS**
NUMBER: **109.05-01**
SUBJECT: **UNUSED OR SERVICEABLE MATERIAL REMOVED FROM THE PROJECT**
DATE: **MARCH 1, 2024**

1. Payment for Items which have been approved by the Team Lead for delivery to the project and not used, will be paid to the contractor in accordance with Subsection 109.05 of the Standard Specifications.

2. The Contractor should submit to the Field Office a letter detailing all the materials to be removed from the project. This letter should contain the information required in Subsection 109.05 of the Standard Specifications. After the Team Lead has received the letter, forward a copy to the District Manager. After this has been accomplished the responsibility for the removal and disposition of the material belongs to the District Manager.

CIRCULAR LETTER

SECTION: **109.08 PARTIAL PAYMENT**
NUMBER: **109.08-01**
SUBJECT: **PARTIAL PAYMENTS**
DATE: **MARCH 1, 2024**

Concrete Retaining Walls:
Where concrete retaining walls are paid for by the square foot (square meter) or lump sum, partial payment for work performed during the estimate period may be made provided that no stockpile payment has been made for materials incorporated into the work. The partial payment will be paid for under the actual pay item for the respective retaining wall.

For walls in both cut and fill sections, the Team Lead will estimate the percentage of the completed wall that is represented by:

1. Footing excavation and/or undercutting and select backfill, if required.
2. Concrete, reinforcing steel and piling in the footing(s).
3. Concrete and reinforcing steel, or precast panels and columns in the wall.
4. Drains and backfill.
5. Texture coat or other finish.

A partial payment quantity will be computed based on the percentages assigned above.

Method: Partial Payment Quantity = $\frac{\text{\% complete}}{100\%}$ x plans quantity

Where, % complete = sum of percentages assigned for the estimate period

Calculations as indicated above will be shown in the field book for each progress estimate that partial payments are made.